RADON

Prevalence, Measurements, Health Risks and Control

NIREN L. NAGDA
EDITOR

ASTM

Radon: Prevalence, Measurements, Health Risks and Control

Niren L. Nagda, Editor

ASTM Manual Series: MNL 15
ASTM Publication Code Number (PCN)
28-015094-17

1916 Race Street, Philadelphia, PA 19103

Library of Congress Cataloging-in-Publication Data

Radon: prevalence, measurements, health risks and control/Niren L. Nagda, editor.
(ASTM manual series; MNL 15)
"ASTM publication code number (PCN) 28-015094-17."
Includes bibliographical references and index.
ISBN 0-8031-2057-5
1. Radon—Environmental aspects. 2. Radon—Measurement.
I. Nagda, Niren Laxmichand, 1946– . II. Series.
TD885.5.R33R326 1994
363.73′8—dc20 94-11665
CIP

Copyright © 1994 AMERICAN SOCIETY FOR TESTING AND MATERIALS, Philadelphia, PA. All rights reserved. This material may not be reproduced or copied, in whole or in part, in any printed, mechanical, electronic, film, or other distribution and storage media, without the written consent of the publisher.

Photocopy Rights

Authorization to photocopy items for internal or personal use, or the internal or personal use of specific clients, is granted by the AMERICAN SOCIETY FOR TESTING AND MATERIALS for users registered with the Copyright Clearance Center (CCC) Transactional Reporting Service, provided that the base fee of $2.50 per copy, plus $0.50 per page is paid directly to CCC, 222 Rosewood Dr., Danvers, MA 01923; Phone: (508) 750-8400; Fax: (508) 750-4744. For those organizations that have been granted a photocopy license by CCC, a separate system of payment has been arranged. The fee code for users of the Transactional Reporting Service is 0-8031-2057-5/93 $2.50 + .50.

NOTE: This manual does not purport to address (all of) the safety problems associated with its use. It is the responsibility of the user of this manual to establish appropriate safety and health practices and determine the applicability of regulatory limitations prior to use.

Printed in Philadelphia, PA
June 1994

Foreword

This publication, *Radon: Prevalence, Measurements, Health Risks and Control,* was sponsored by ASTM Committee D22 on Sampling and Analysis of Atmospheres. The editor was Niren L. Nagda of ENERGEN Consulting, Inc., Germantown, MD. This is Manual 15 in ASTM's manual series.

Acknowledgments

The solid efforts by the authors of the chapters are clearly seen as one peruses this book. The authors responded to the many requests from ASTM and from me to complete their contributions for this book initiated in 1989.

The behind-the-scene efforts by the reviewers and by the ASTM staff may not be as easy to recognize at first glance. I wish to thank Michael Brambley, Edward Maher, Gordon Nifong, and Harry Rector, who reviewed the chapter manuscripts. Their recommendations helped the authors and me to improve the content and presentation.

The patience and hard work by the ASTM staff to publish this book is acknowledged. Without the persistent efforts of Kathy Dernoga, Manager of Acquisition and Review, and her staff including Monica Siperko, and David Jones, who served as the ASTM editor, this book would not have been possible.

Finally, I am grateful to my family, who gracefully accepted the serious encroachment the preparation of this book had on our family and leisure time.

Niren L. Nagda
Editor

此为试读，需要完整PDF请访问：www.ertongbook.com

Contents

Chapter 1—Radon—A Multifaceted Environmental Problem: An Overview 1
by Niren L. Nagda

Chapter 2—Radon and the Natural Environment 9
by Richard G. Sextro

Chapter 3—Health Effects of Radon 33
by Jonathan M. Samet

Chapter 4—Measurement Methods and Instrumentation 49
by Roy C. Fortmann

Chapter 5—Radon Measurement Protocols 67
by Melinda Roca-Battista and Paul Magno

Chapter 6—Geology and Occurrence of Radon 83
by R. Randall Schumann, Linda C. S. Gundersen, and Allan B. Tanner

Chapter 7—Concentration Patterns 97
by Michael D. Koontz

Chapter 8—Radon Control Strategies 112
by Kelly W. Leovic and Richard Roth

Chapter 9—EPA's Strategy to Reduce Risk of Radon 134
by Steve Page

Chapter 10—Current and Future Perspectives 148
by Susan L. Rose

Index 159

Radon—A Multifaceted Environmental Problem: An Overview

1

by Niren L. Nagda[1]

IMPORTANCE OF RADON

DURING THE LAST TWO DECADES, it has been well publicized that exposure to radon causes lung cancer. Radon, a naturally occurring radioactive gas, seeps into and accumulates inside buildings. Elevated indoor radon concentrations have been observed in all parts of the United States [*1*]. A consensus of opinion on human carcinogenicity of radon has been well established from studies of uranium miners by national and international health organizations such as the World Health Organization's International Agency for Research on Cancer (IARC) [*2*], the Biological Effects of Ionizing Radiation (BEIR IV) Committee of the National Academy of Sciences [*3*], the International Commission on Radiological Protection (ICRP) [*4*], and the National Council on Radiation Protection and Measurement (NCRP) [*5*]. Still, the magnitude of exposure to and risks due to radon are not fully recognized by the general public.

Among sources of ionizing radiation, natural radiation contributes the largest percentage to the total average annual effective dose equivalent to members of the U.S. population [*6*]. Fifty-five percent of that total is caused by radon (Fig. 1). Radiation from medical procedures, cosmic radiation, terrestrial radiation, radionuclides deposited inside the human body, and consumer products contribute the bulk of the remainder. Often-feared sources of radiation such nuclear power production and nuclear weapons testing contribute well below 1%. Further, Nero [*7*] estimates that exposure to radon exceeds the lifetime dose from radiation exposure to the average resident of Europe and Asia from the nuclear accident at Chernobyl (Fig. 2).

Indoor radon is the second leading cause of lung cancer, next to smoking, which is estimated to cause 146 000 lung cancer deaths annually in the United States [*8*]. The U.S. Environmental Protection Agency (EPA) estimates that the number of lung cancer deaths per year in the United States due to residential radon exposure is approximately 13 600, with an uncertainty range of 7000 to 30 000 [*9*]. The estimates of radon risk are based on the BEIR IV committee's risk projection model as modified by the EPA and the most recent exposure information [*10,11*]. Some of the major uncertainties in the estimates of radon risks are related to the effect of smoking. Presuming multiplicative interaction between radon and smoking, it is estimated that smokers and former smokers face the greatest radon risk: 70% of radon risk is borne by smokers who comprise approximately 30% of the U.S. population; 24% of the risk is borne by former smokers or 23% of the population; and the remaining 6% is shared by 47% of the population—those who have never smoked [*11*]. The EPA has also compared the number of deaths attributed to radon-induced lung cancer with other causes of deaths: drunk driving—23 400 annual deaths; drowning—4600 deaths; fire and burns—4400 deaths; air transport accidents—1000 deaths [*1,9*]. Thus, no matter how one looks at the radon issue or which estimate is chosen for radon-induced lung cancer deaths, radon is an extremely important environmental health issue.

Radon was recognized as a potential public health threat in the United States more than 30 years ago. Table 1 provides a brief historical (1955–1985) overview of important developments relative to radon exposure indoors. To understand and effectively deal with radon, one needs to understand the physics of radon, its health effects, measurement techniques and protocols, the extent of its occurrence in the United States, mitigation principles and practices, and legislative and regulatory actions. These areas are touched upon in the discussion below and are further expanded in subsequent chapters of this book.

RADON AND THE NATURAL ENVIRONMENT [*24*]

Chemically, radon is the heaviest noble gas and occurs as three isotopes of atomic weight 219, 220, and 222. Radon 222, the isotope of main concern, is produced by radioactive decay of radium which, in turn, is a radioactive product of uranium. Radon has a half-life of 3.8 days and disintegrates into a series of solid, short-lived radioisotopes or radionuclides collectively referred to as radon progeny, radon daughters, or radon decay products. A basic unit of measurement of radioactivity of radon is the becquerel (Bq), which is one disintegration per second; the unit of picocurie (pCi) is a commonly used unit in the United States and is equal to 3.7×10^{-2} disintegrations per second. The concentration of radon is expressed as becquerels per cubic meter (Bq m^{-3}) or picocuries per liter (pCi/L). Units of radon decay product concentrations, exposure, and dose are defined elsewhere [*24,25*].

Because radium—the parent of radon—is found in all crustal materials, radon is ubiquitous in both indoor and outdoor air. Sources of radon include soil, water, outdoor air, and building materials, but transport of radon-bearing gas from soil is generally the most predominant source of indoor

[1]ENERGEN Consulting, Inc., 19900 Wild Cherry Lane, Germantown, MD 20874-1016.

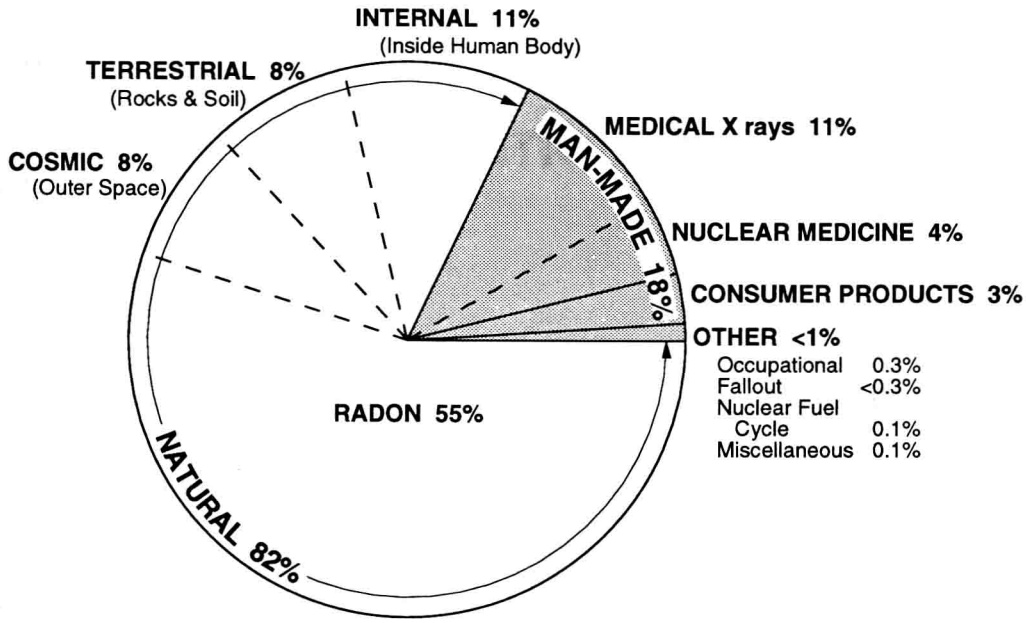

FIG. 1–Sources of radiation exposure to the U.S. population [*6*].

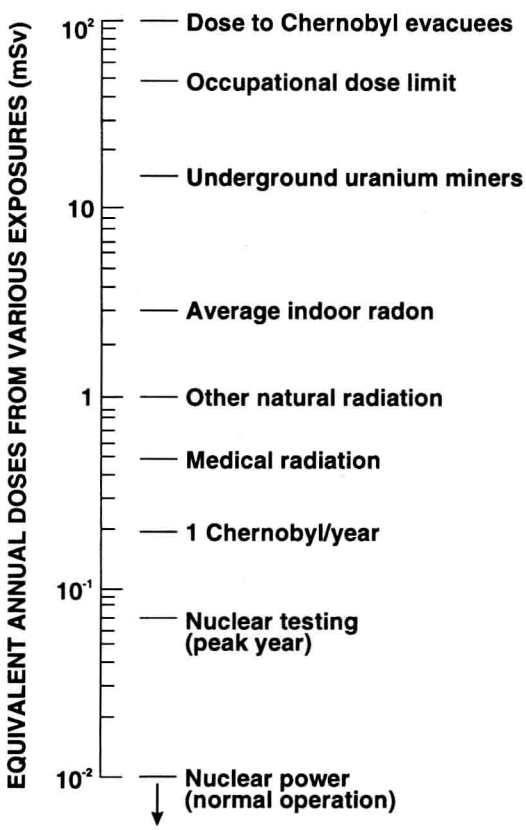

FIG. 2–Comparison of radiation doses from different sources [*7*].

radon, particularly in buildings with elevated concentrations. The indoor-outdoor air exchange rate of a building is another factor that influences the ultimate indoor concentration, but the soil-gas entry rate has a much stronger influence. Both the soil-gas entry rate and the air exchange rate are affected by outdoor conditions such as wind speed and indoor-outdoor temperature differences. In addition, factors such as geology, precipitation, and the type of foundation of a structure influence radon availability. Because the driving forces for radon entry can vary daily or seasonally, the dynamic interaction of all these factors in determining indoor radon concentrations in a specific building is complex.

HEALTH EFFECTS [*25*]

Lung cancer due to radon occurs as a result of the dose of alpha energy emitted by radon decay products, which is delivered to target cells in the lungs. Because alpha energy deposition in the lungs cannot be directly measured, modeling is used to simulate the sequence of events from inhalation of radon decay products to cellular injury. Such efforts in dosimetry, combined with animal studies, provide valuable insights and enable research into various aspects of the cause-and-effect relationship such as the effect of long-term exposures to low levels of radon.

Epidemiologic studies or health studies of human populations, whether specific segments of the population or the population in general, offer another avenue for assessing health effects of radon. Epidemiologic investigations, by their nature, have some constraints in yielding fully definitive conclusions because multiple causes of the same health effect, such as cigarette smoking and radon in the case of lung cancer, have to be carefully considered. Studies of lung cancer in uranium miners have consistently shown increased lung cancer occurrence from exposure to radon decay products. Studies of the general population are underway but are complicated by the fact that the history of exposure to radon is difficult to reconstruct, particularly for people who have changed residences, given the general mobility of the American population.

TABLE 1—An historical overview of indoor radon-related developments 1955–1985.

Year	Event/Action
1955	The term "working level" (WL) was originally proposed at the Seven States Conference held in Salt Lake City, Utah, in February 1955. It was considered that insufficient data were available to justify adoption of a maximum permissible concentration for radon decay products, but an interim guide was needed. In 1957, the WL unit was adopted by the U.S. Public Health Service, but its definition was still evolving. In 1973, the American National Standards Institute defined one WL as any combination of radon decay products in 1 L of air that will ultimately release 1.3×10^5 MeV of alpha energy [*3*].
1963	The First International Symposium on the Natural Radiation Environment was held at William Marsh Rice University, Houston, Texas, 10–13 April 1963. Papers on radon included a review of radon migration in the ground by Tanner [*12*] and a survey technique for measurement of radon by Lucas [*13*].
1970	The Surgeon General of the United States specified concentration guidelines for indoor radon decay products in dwellings constructed on or with uranium mill tailings (uranium- and radium-bearing waste materials). The recommendations were to take remedial action at levels above 0.05 WL, consider remediation for 0.01 to 0.05 WL, and exclude remediation below 0.01 WL [*14*].
1971	Congressional hearings were held on the use of uranium mill tailings in construction in Colorado [*15*].
1972	The Grand Junction Remedial Action Program (GJRAP) was authorized to survey and remediate structures in which uranium mill tailings from the Grand Junction uranium mill were used. Over 600 residential, commercial, or institutional structures have been remediated under GJRAP [*16*].
1975	Based on preliminary findings of a study involving homes built on reclaimed land and unreclaimed land in Polk County, Florida, an EPA report [*17*] concluded that "consideration should be immediately given to providing the State of Florida with the recommendation that continued use of reclaimed land for construction of new structures be discouraged."
1978	The Uranium Mill Tailings Radiation Control Act was enacted (Public Law 95-604). Title I of the act authorized the Uranium Mill Tailings Remedial Action Program (UMTRAP) to be conducted by the U.S. Department of Energy. Standards promulgated by EPA for conducting this remedial program specified that radon levels should not exceed 0.02 WL for existing structures. UMTRAP in Colorado has involved over 8000 contaminated properties of which 4000 require remedial action. In some cases remedial actions have been unsuccessful because of radioactivity from natural uranium deposits [*16*].
1979	In May 1979, the EPA Administrator recommended to the Governor of Florida that remedial action be taken in some existing homes and that future homes built in the region should incorporate construction techniques to resist the entry of radon [*18*].
1980–1984	Various studies identified elevated radon levels in residences surveyed in the states of Maryland [*19*], Pennsylvania and New Jersey [*20,21*], and Maine [*22*].
1984	In December 1984, Stanley Watras, an engineer at the Limerick Nuclear Generating Station in Pottstown, Pennsylvania, set off portal alarms that sense radioactive contamination on workers' clothing. Subsequent investigations determined that the radioactive materials were the decay products of radon and that the source of the radon was not at the nuclear power plant but in the indoor air of the Watras home. Radon levels of 13.5 WL were found in his home, greater than any indoor level ever reported in the literature [*23*].
1985	The EPA Administrator established the Radon Action Program in September 1985 [*1*]. The EPA's Radon Action Program was designed to create a federally coordinated nonregulatory program for reducing risks due to radon through assessment of the magnitude and distribution of radon problems, development of technologies for radon mitigation and prevention in new and existing buildings, transfer of technologies to state and local governments and the private sector, and communication of radon information to the public.

Risk-projection models, expressed in terms of occurrence of lung cancer per unit of exposure and derived from the above types of studies, are used to develop estimates of excess cancer risk due to radon. The estimates of lung cancer deaths attributable to radon mentioned earlier are derived from such models.

MEASUREMENT METHODS AND INSTRUMENTATION [*26*]

Various factors need to be considered in selecting methods and instruments for measurement of radon or radon decay products. Examples of such factors include measurement objectives, type of desired output, and sampling duration. For example, if the measurement objective is to assess exposure to radon in a large number of dwellings, a method providing an annual average concentration of radon would be a practical choice. Such a method would meet the objective and would be easier and less costly to use than that which provides a continuous readout of radon concentration every hour.

Methods for measuring radon and its decay products are based on the detection of radioactive emissions. Such methods can include detection of alpha particles, gamma rays, or less commonly, beta rays. A variety of methods and instruments based on such principles is commercially available. Measurements of radon are useful in conducting surveys of

radon concentrations in a building, whereas measurements of radon decay products are useful in dosimetric studies. Devices such as alpha track detectors, activated carbon monitors, and passive electret ion chambers are widely used to provide time-integrated measurements of radon over a period of days (activated carbon, electrets) or months (alpha track detectors, electrets). Scintillation cells are commonly used for continuous monitoring or for instantaneous or grab sampling of radon. Measurements of radon decay products are generally more difficult and more costly and, thus, radon decay product concentrations are often inferred from radon concentrations and theoretical considerations.

Radon-flux and soil-gas measurements are useful for characterizing the potential for radon prior to construction, as well as for aiding a diagnostic assessment for mitigation. The basic measurement techniques for radon and radon decay products are generally well established, and applications of these measurements to help improve the understanding of radon potential in soil and radon-resistant methods of construction are gaining increased attention in research.

As the number of measurements of radon and radon decay products have increased, so has the need for standardization of such measurements. Such need has become quite important as the use of measurements has gone beyond research studies. Recognizing this need, the ASTM D22.05 Subcommittee on Indoor Air has been developing standard methods, practices, and guides for the measurement of radon and radon decay products.

MEASUREMENT PROTOCOLS [*27*]

Radon concentrations in a building vary, depending on where and when a measurement is made. Within the same building, if the floor on which the measurement is made is in contact with the ground, then the radon concentration for this floor would generally be higher than for an upper-level floor, since the predominant source of elevated radon is soil gas. Within one floor, especially in large buildings with complex ventilation systems, concentrations can vary by location. Season or even time of day can make a difference in concentration at a given location. Further, open windows or doors and outdoor conditions such as wind speed or soil moisture can make a difference in indoor radon levels. Given all the factors that can influence concentrations, development of a well-defined, predetermined series of procedures, i.e., measurement protocol, prior to conducting any measurements is necessary.

The purpose of the measurements, choice of measurement methods, sampling and analytical techniques, selection of locations and frequency of measurements, and quality control and quality assurance procedures are some of the factors that need to be carefully defined in protocols. Some elements of quality control procedures include calibration of instruments and performance checks, use of replicate and blank samples, and analysis of samples of known radon content. A quality assurance program includes specifications for comprehensive documentation of procedures, preventive maintenance, corrective actions, and delineation of responsibilities.

Several measurement protocols for a variety of purposes have been developed by different organizations. For example, since the early 1970s, the U.S. Department of Energy (DOE) has developed and used protocols for measurement of radon and radon decay products in residences affected by uranium mill tailings. EPA has developed protocols for radon measurements in houses, schools, and workplaces. Such protocols undergo refinements in these organizations and through the consensus development processes of ASTM.

GEOLOGY AND OCCURRENCE [*28*]

The geology of an area determines the concentrations of radium and radon in the rock and soil as well as the ease with which radon can move through them. Some rock types having high radon emanation potential include carbonaceous shales, glauconite sandstones, phosphorites, uranium-bearing granites, metamorphic rocks, and sheared or faulted rocks. The radon emanation potential of such rock types, combined with soil characteristics such as porosity, permeability to gas movement, and moisture content, are important in determining radon potential, i.e., radon production and mobility.

Radon potential for a geologic province (geologically similar area) can be determined by analyzing available geologic, aerial radiometric, soil radon, and indoor radon data. Very generalized geologic provinces are depicted in Fig. 3. The Coastal Plain of the southern and eastern United States has the lowest potential, but localized concentrations of uranium and radium have produced high indoor radon concentration in certain areas of Florida, New Jersey, and Texas, for example. The Pacific Coastal Range and Sierra Nevada are expected to have low to moderate radon potential, but limited data are available to confirm such an inference. The Appalachian region and Rocky Mountains have low to moderate radon, but each of these areas has localized areas of high radon potential (Pennsylvania, New Jersey, Maryland, and Virginia in the Appalachian region and Colorado and Idaho in the Rocky Mountain region). In the Appalachians, the highest radon values occur in association with faults and fractures in the rock. Uranium-bearing clays in the Great Plains region are the probable cause of high indoor radon levels in South Dakota, Kansas, and eastern Colorado. Elevated indoor radon concentrations in areas of North Dakota and Minnesota are the result of high radon production protential and high permeability associated with clay-rich tills originating from glacial deposits which, in turn, are derived from uranium-bearing shales.

CONCENTRATION PATTERNS [*29*][2]

Since 1986, more than 40 states in the United States have conducted systematic statewide screening surveys of indoor radon concentrations using activated carbon monitors, primarily charcoal canisters. The canisters, which are typically used for sampling radon concentrations over two- to seven-day periods under closed-house conditions during the winter,

[2]The results of EPA's National Residential Radon Survey [*30*] were not available when the chapter on concentration patterns was prepared.

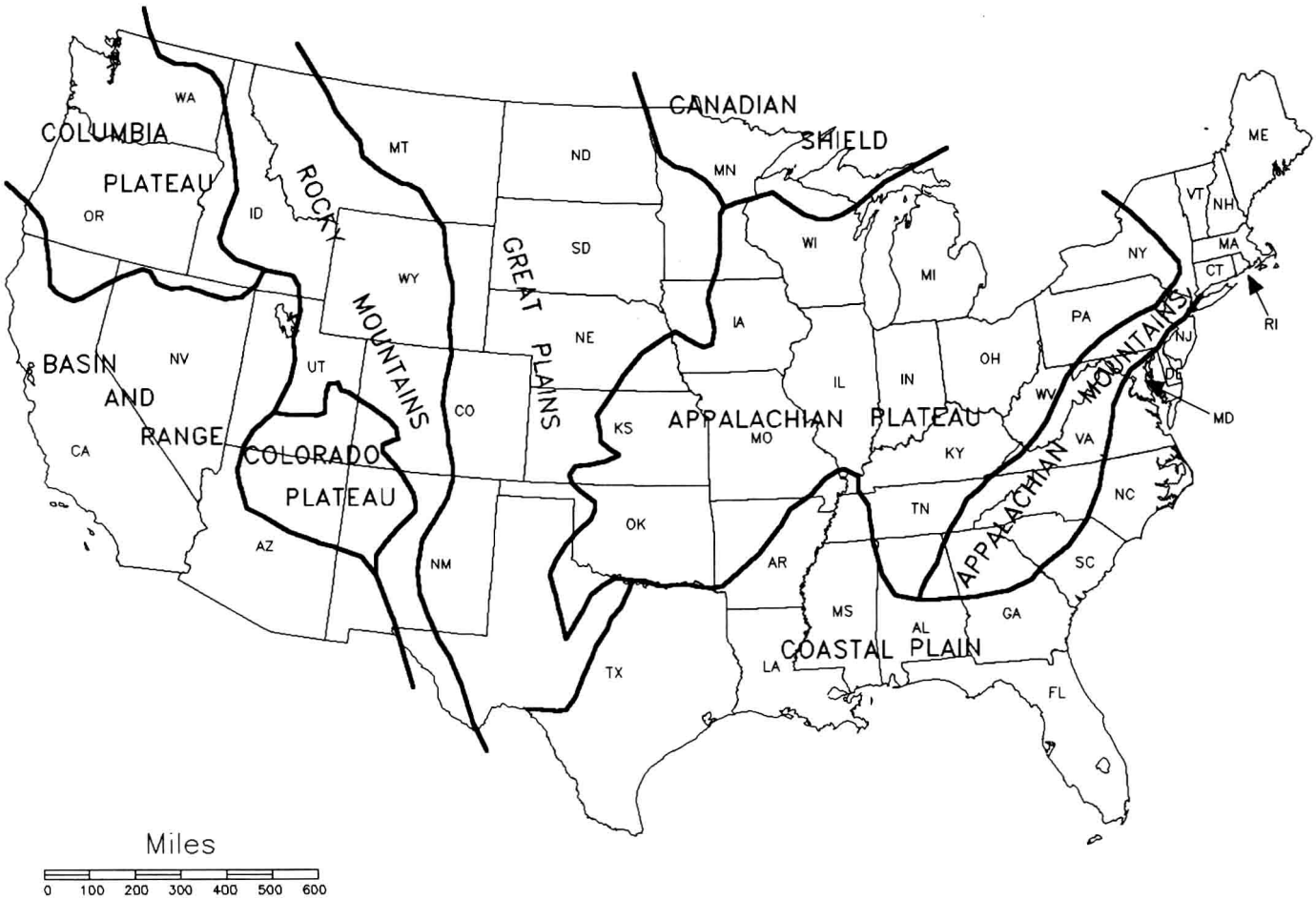

FIG. 3—Generalized geologic provinces [*28*].

tend to overestimate radon concentrations, relative to longer-term samplers used to measure radon concentrations under normal living conditions. Despite this bias, the results of statewide surveys using activated carbon monitors provide useful information on radon concentration patterns in the United States.

The statewide surveys indicate that indoor screening measurements are considerably lower in southern and western census regions of the country than in north-central and northeast regions (Fig. 4). Iowa and North Dakota in the north-central and Pennsylvania in the northeast have the highest average screening measurements among those states that have been surveyed. Maine, Minnesota, Nebraska, New Hampshire, New Jersey, and Ohio are other states with high averages. Consistent with geologic indicators, the states with the lowest screening measurements tend to lie along the western, southern, and southeastern coasts. However, even among states with relatively low average screening results, it is possible to find individual counties in which some fraction of homes have elevated radon measurements. Spatial patterns of indoor radon concentrations within the states generally have been consistent with expectations from geology and radioaerometric surveys. It should be recognized that, although geographic areas with higher radon potential can be delineated with a reasonable degree of certainty, radon levels in individual buildings cannot be safely deduced without conducting indoor radon measurements.

CONTROL STRATEGIES [*31*]

The most common way for radon to enter a building is through pressure-driven transport of soil gas. Other, but less prevalent, reasons for elevated indoor radon concentrations include emanation of radon from well water containing radium and use of uranium-contaminated construction materials. Thus, much of the emphasis of radon reduction or control is on prevention of radon entry from the soil gas into the building.

For radon control to be effective, a proper diagnosis of radon problems, such as radon measurements to determine entry routes, evaluation of construction integrity, and assessment of the HVAC system, is essential. Among the methods to reduce radon entry into a building, active subslab depressurization (ASD) is the most widely used control method. For ASD, a fan is used to create a negative pressure field in the soil under the building (Fig. 5). This negative pressure field reverses the flow of radon—instead of entering the building, the radon is exhausted by the fan to the outdoors. Depending on the prevalent entry route and building construction features,

此为试读，需要完整PDF请访问：www.ertongbook.com

FIG. 4–Average indoor radon screening measurement results by state and region [*29*].

ASD techniques include subslab depressurization, crawl-space depressurization, and block-wall depressurization.

Other approaches for reducing risk from radon exposure are by dilution with outdoor air or by treatment to remove radon or radon decay products. These techniques remove radon only after it enters the building, but do not prevent radon entry. Ventilation reduces the radon concentration through dilution, but its application is limited because of the impracticality of increasing the ventilation rate by severalfold in order to achieve a sufficient reduction in radon concentration. Further, energy penalties associated with even moderate increases in ventilation often make this approach unattractive. Removal by plating out of radon decay products, i.e., attachment of particles to surfaces, is advocated by some as a method for reducing risk due to radon, but that approach is fraught with uncertainties associated with its actual benefit in reducing health risks.

New construction offers a variety of avenues for reducing potential risk of elevated radon, typically at a much lower cost than a retrofit. These techniques focus on prevention of radon entry into the building and include changes in design and construction of foundations, slabs, and block walls, use of membranes to retard the flow of soil gas, as well as provisions for roughing in the piping and electrical components of an ASD system. Research on new construction techniques is continuing under the sponsorship of the EPA and some state agencies such as the Florida Department of Community Affairs.

The ASTM Subcommittee E6.41 on Building Infiltration is developing consensus documents on standardized approaches for controlling radon in buildings. For example, a standard guide for radon control options for the design and construction of new low-rise residential buildings was approved by ASTM in 1992 [ASTM Guide for Radon Control Options for the Design and Construction of New Low Rise Residential Buildings (E 1465-92)].

LEGISLATION AND EPA'S RADON ACTION PROGRAM [*32*]

In 1985, in response to the very high levels of radon discovered in the Reading Prong area, EPA established the Radon Action Program. The program was designed to address key needs such as an assessment of the extent of the radon problem, standardized measurement methods, cost-effective techniques for reducing radon levels, guidelines on radon levels at which reduction should be undertaken, and tools for communicating health concerns and solutions to the public. Subsequently, the U.S. Congress expanded EPA's program by

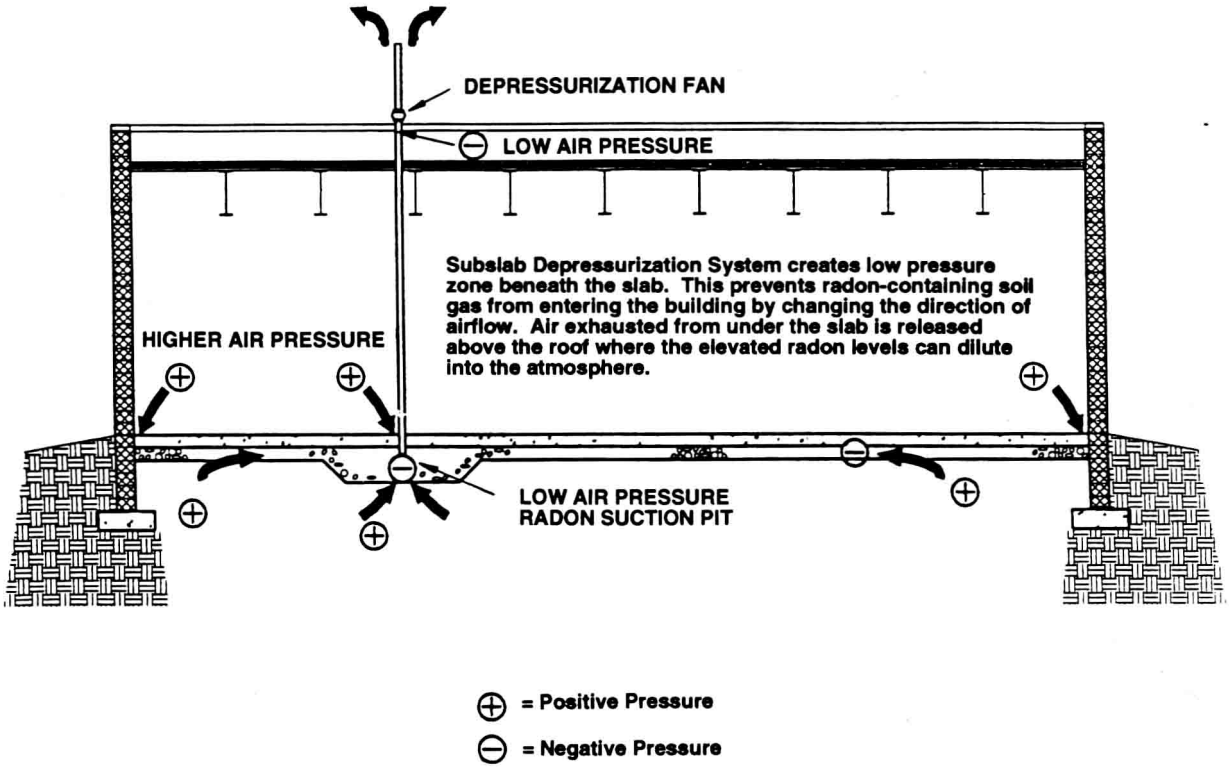

FIG. 5–Active soil depressurization method to prevent radon entry into buildings [*31*].

enacting two pieces of legislation: (1) Superfund Amendments and Reauthorization Act of 1986, and (2) the Indoor Radon Abatement Act of 1988. Important aspects of EPA's continuing research on radon include: further refining estimates of the magnitude of the health risk posed by residential radon exposure, assessing the interactive effects of smoking and radon, identifying geographic areas with the highest potential for radon problems, and studies to determine the cost and reliability of approaches for measuring, mitigating and preventing elevated radon levels in a variety of building types. A major area of emphasis for EPA is the use of a decentralized system for informing the public through state and local government agencies, non-profit public health and consumer protection organizations and professional and business associations. These cooperative partners can use their established communication channels to deliver radon information to individual members of public. Efforts to inform the public and encourage action are important and will be continued by EPA but they will be combined with incentive programs and initiatives to build institutional support for building codes and policies to require radon testing and mitigation when existing homes are sold, especially in high risk areas.

CURRENT AND FUTURE PERSPECTIVES [*33*]

Subjects such as the origin of radon, health effects, methods and protocols for measurements, geologic patterns affecting radon concentrations, radon concentration patterns across the United States, strategies for controlling radon, and EPA's Radon Action Program collectively provide a well-rounded look at the radon issue. For a complete and comprehensive understanding, though, perspectives on other federal agency programs, state programs, industry viewpoints, and public perceptions of risks need to be examined.

The DOE Office of Health and Environmental research has allocated a substantial funding (approximately $10 million per year over the 1987-to-1992 period) to conduct a basic radon research program [*34*]. The DOE's program has made significant contributions to the understanding of the indoor radon problem in the areas of radon measurements, availability, entry dynamics, and dosimetry. The DOE research formed the basis for an input to EPA's risk estimate of 13 600 annual deaths. A further DOE contribution is the focus on using new techniques in cellular and molecular biology to answer the important questions on whether there is a threshold for carcinogenic effect from radiation and repair of alpha radiation damage.

Some states such as Florida, Minnesota, and New Jersey have undertaken their own radon programs that, in certain aspects, go beyond the federal radon program because of specific state needs. For example, the state of Florida became involved in the radon issue because of the phosphate mining areas in the state. Concerns for elevated indoor radon in homes built on reclaimed phosphate lands have been raised since the mid-1970s. A radon statute passed in 1988 by the Florida state legislature provides Florida with a radon program to identify and eliminate radon problems through changes in building codes. To finance the research effort to accomplish these tasks, the statute has established a radon trust fund which levies a surcharge on new construction and renovation of buildings. The state has co-funded research with EPA, and such state-federal partnerships allow research

dollars to go further in developing long-term, more widely applicable initiatives.

Radon policies have been established quite promptly following the discovery of Watra's house. Yet, uncertainties remain in many aspects of the radon issue including identification of geographical areas with elevated radon potential and quantification of health risks to nonsmokers. Similarly, influencing peoples' perceptions about radon risks is more complex than ever thought before. Understanding and conveying the risks to people will require continued emphasis on research and education.

REFERENCES

[1] U.S. Environmental Protection Agency, *EPA's Radon Program: Reducing the Risk of Indoor Radon*, Office of Radiation Program, Washington, DC, July 1991.

[2] International Agency for Research on Cancer, *Monograph on the Evaluation of Carcinogenic Risks to Humans, Volume 43: Man-made Mineral Fibers and Radon*, IARC, World Health Organization, Lyon, France, 1988.

[3] National Research Council, *Health Risks of Radon and other Internally Deposited Alpha-emitters*, BEIR IV, National Academy Press, Washington, DC, 1988.

[4] International Commission on Radiological Protection, *Lung Cancer Risk from Indoor Exposures to Radon Daughters*, ICRP Publication 50, Pergamon Press, Oxford, U.K., 1987.

[5] National Council on Radiation Protection and Measurements, *Evaluation of Occupational and Environmental Exposures to Radon and Radon Daughters in the United States*, NCRP Report 78, Bethesda, MD, 1984.

[6] National Council on Radiation Protection and Measurements, *Ionizing Radiation Exposure of the Population of the United States*, NCRP Report 93, Bethesda, MD, 1987.

[7] Nero, A., "Earth, Air, Radon and Home," *Physics Today*, Vol. 42, No. 2, April 1989, pp. 32–39, and personal communication with the author, Lawrence Berkeley Laboratory, Berkeley, CA, October 1992.

[8] American Cancer Society, *Cancer Facts and Figures 1992*, Washington, DC, 1992.

[9] U.S. Environmental Protection Agency, *A Citizen's Guide to Radon*, EPA 402-K92-001, Washington, DC, 1992.

[10] U.S. Environmental Protection Agency, *National Residential Radon Survey, Statistical Analysis, National and Regional Estimates*, Office of Radiation Programs, Washington, DC, 1991.

[11] U.S. Environmental Protection Agency, *Technical Support Document for the 1992 Citizen's Guide to Radon*, Office of Radiation Programs, EPA 400-R-92-011, Washington, DC, 1992.

[12] Tanner, A. B., "Radon Migration in the Ground: A Review," *The Natural Radiation Environment*, J. A. S. Adams and W. M. Lowder, Eds., The University of Chicago Press, Chicago, IL, 1964, pp. 161–190.

[13] Lucas, H. F., "A Fast and Accurate Survey Technique for Both Radon 222 and Radium 226," *The Natural Radiation Environment*, J. A. S. Adams and W. M. Lowder, Eds., The University of Chicago Press, Chicago, IL, 1964, pp. 315–329.

[14] U.S. Surgeon General's letter of 27 July 1970 to Dr. R. L. Cleere, Executive Director, Colorado State Department of Health as contained in Appendix A of the U.S. Environmental Protection Agency's report *Preliminary Findings: Radon Daughter Levels in Structures Constructed on Reclaimed Florida Phosphate Land*, Technical Note, Office of Radiation Program, ORP/CSD-75-4, Washington, DC, September 1975.

[15] U.S. Congress, *Use of Uranium Mill Tailings for Construction Purposes*, hearings conducted 28–29 Oct. 1971, 91st Congress, 1st Session, 1971, U.S. GPO, Stock No. 5270-1395, Washington, DC.

[16] Hazle, A. J., "Colorado: The Legacy of Uranium Mining," *Environment*, Vol. 29, No. 1, January/February 1987, pp. 13, 18–21.

[17] U.S. Environmental Protection Agency, *Preliminary Findings: Radon Daughter Levels in Structures Constructed on Reclaimed Florida Phosphate Land*, Technical Note, ORP/CSD-75-4, Office of Radiation Program, Washington, DC, September 1975.

[18] U.S. Environmental Protection Agency, Indoor Radiation Exposure Due to Radium-226 in Florida Phosphate Lands; Radiation Protection Recommendations and Request for Comment, *Federal Register*, Vol. 44, No. 128, 1979, pp. 38664–38670.

[19] Moschandreas, D. J. and Rector, H. E., "Indoor Radon Concentrations," *Environment International*, Vol. 8, 1982, pp. 77–82.

[20] Roberts, P. L., "Radon: One Utility's Experience," in *Proceedings: Indoor Air Quality Seminar—Implications for Electric Utility Conservation Programs*, Report EA/EM-3824, Electric Power Research Institute, Palo Alto, CA, January 1985, pp. 7–1 to 7–12.

[21] Sachs, H. M., Hernandez, T. L., and Ring, J. W., "Regional Geology and Radon Variability in Buildings," *Environment International*, Vol. 8, 1982, pp. 97–103.

[22] Hess, C. T., Norton, S. A., Brutseart, W. F., Casparius, R. E., Combs, E. G., and Hess, A. L., *Radon 222 in Potable Water Supplies in Maine: The Geology, Hydrology, Physics, and Health Effects*, Office of Water Research, Project A-045-ME Completion Report, 1979, See also Hess, C. T., Casparius, R. E., Norton, S. A., and Brutseart, W. F., "Investigation of Natural Levels of Radon-222 in Groundwater in Maine for Assessment of Related Health Effects," *The Natural Radiation Environment III*, Vols. 1 and 2, T. F. Gesell and W. M. Lowder, Eds., 1980, pp. 529–546, CONF-780422, National Technical Information Service.

[23] Gerusky, T. M., "Pennsylvania: Protecting the Homefront," *Environment*, Vol. 29, No. 1, 1987, pp. 12–18.

[24] Sextro, R. G., "Radon and the Natural Environment," Chapter 2, this publication.

[25] Samet, J. M., "Health Effects of Radon," Chapter 3, this publication.

[26] Fortmann, R. C., "Measurement Methods and Instrumentation," Ch. 4, this publication.

[27] Ronca-Battista, M. and Magno, P., "Radon Measurement Protocols," Chapter 5, this publication.

[28] Schumann, R. R., Gundersen, L. C. S., and Tanner, A. B., "Geology and Occurrence of Radon," Chapter 6, this publication.

[29] Koontz, M. D., "Concentration Patterns," Chapter 7, this publication.

[30] Lucas, R. M., Grillo, R. B., and Kemp, S. S., *National Residential Radon Survey, Statistical Analysis, Volume 1: National and Regional Estimates*, prepared for Office of Radiation, U.S. Environmental Protection Agency by Research Triangle Institute, Report RTI/5158/49-1F, Research Triangle Park, NC, July 1992.

[31] Leovic, K. and Roth, R. C., "Radon Control Strategies," Chapter 8, this publication.

[32] Burnett, J., Chiles, B., and Dickson, M., "EPA's Strategy to Reduce Risk of Radon," Chapter 9, this publication.

[33] Rose, S., "Current and Future Perspectives," Chapter 10, this publication.

[34] U.S. Department of Energy, *Radon Research Program*, Office of Energy Research, Office of Health and Environmental Research, DOE/ER-0536P, March 1992.

Radon and the Natural Environment

2

by Richard G. Sextro[1]

RADON HAS COME TO BE RECOGNIZED as one of the most important environmental pollutants to which humans are exposed, in part due to the fact that it is widespread—indeed, radon is present in all houses—and due to the health risks associated with even average concentrations. Although the existence of radon has been known since the beginning of this century and the health effects associated with exposure to mine atmospheres (both uranium and nonuranium mines) have been studied for several decades, our understanding of it as an indoor air contaminant in ordinary houses has developed substantially only within the past decade. Some of the earliest indications of elevated concentrations in U.S. homes were associated with the use of uranium mill tailings as backfill in house construction [*1*] or in other areas where radium concentrations were elevated, such as parts of central Florida, where buildings were built on lands reclaimed from phosphate mining [*2*]. However, by the late 1970s, researchers had found homes in other parts of the U.S. with elevated radon concentrations for which there were no radon sources that could be associated with technological activities [*3–5*]. The discovery of high-to-very-high indoor concentrations in eastern Pennsylvania in the mid 1980s [*6,7*] did not offer a new scientific perspective on the radon question; rather, it focused the attention of the public and local and federal governmental agencies on the issue. This chapter provides a broad overview of radon and its radioactive decay products. A number of topics are introduced in this discussion that are covered in greater detail in later chapters.

BACKGROUND

Origin of Radon

Radon is a colorless and odorless monatomic gas. It is, under all conditions of interest here, chemically inert and is the heaviest of the six noble gases constituting Group 0 of the Periodic Table of Elements. Unlike other gases in this group, it has no stable isotopic form; instead, all of its isotopes are radioactive. There are three naturally occurring isotopes of radon, each associated with a different radioactive decay series that begin with the radionuclides ^{238}U, ^{232}Th, or ^{235}U, respectively. Radon-222, which has a 3.8 day half-life, is part of the uranium (^{238}U) decay chain. This nuclide is the most important of the three radon isotopes because of its concentrations in indoor air and due to the health effects associated with exposures to its radioactive decay products. Radon-220, alternatively referred to as thoron, is part of the thorium (^{232}Th) decay series and has a half-life of 56 s. Under certain circumstances, it can contribute to the radiation exposure in homes in the United States, though its short half-life typically limits the indoor concentrations of thoron and its decay products. The third radon isotope in this list, ^{219}Rn (archaically named actinon in reference to its presence in the "actinium," or ^{235}U, decay series), does not contribute significantly to human radiation exposures due both to the low natural abundance of the ^{235}U precursor (approximately 20 times smaller activity concentration than ^{238}U) and the very short (4 s) ^{219}Rn half-life. In this book, use of the word radon is generally synonymous with ^{222}Rn. In those cases where the discussion refers directly to the ^{220}Rn isotope (thoron), this will be noted.

The ^{238}U and ^{232}Th decay series are illustrated in Figs. 1 and 2, respectively. As can be seen, each decay chain proceeds through a series of radioactive transformations and ultimately terminates in a stable isotope of lead. These radioactive decays proceed either by alpha decay, in which the unstable nucleus emits an alpha particle, equivalent to the nucleus of a helium atom, or by beta decay, where the unstable nucleus releases an electron. In some cases, these alpha or beta decays may also lead to the production of gamma radiation, which is an important source of external radiation exposure, as discussed below.

Uranium-238, ^{235}U, and ^{232}Th are primordial radionuclides, that is, they were present at the origin of the earth and have half-lives that are of the same order of magnitude as the age of the earth (ca. 4.5×10^9 years). Although the natural abundance of ^{238}U and ^{232}Th varies by geological setting, they are widely distributed in the earth's crust. The highest average concentrations of these radioelements are found in relatively rare alkaline intermediate rocks, with both having concentrations on the order of 500 Bq kg^{-1} (13.5 pCi g^{-1}). Somewhat lower values are found in other igneous rocks, ~80 to 100 Bq kg^{-1} (2 to 3 pCi g^{-1}) for both these nuclides. Among the sedimentary rocks, shales tend to have higher concentrations, ~40 and 50 Bq kg^{-1} (1 and 1.5 pCi g^{-1}) for ^{238}U and ^{232}Th, respectively. The mean of the upper continental crust, weighted by the abundance of the various rock types, is about 50 Bq kg^{-1} (1.4 pCi g^{-1}) for each of these radionuclides [*8*].

The radiochemical composition of soil, which is a mixture of soild materials, air, and often water and organic matter, typically reflects the geological formations from which the soil has been derived, although weathering and other transport processes can affect the soil composition as well. On

[1]Staff scientist, Lawrence Berkeley Laboratory, Building 90-3058, Berkeley, CA 94720.

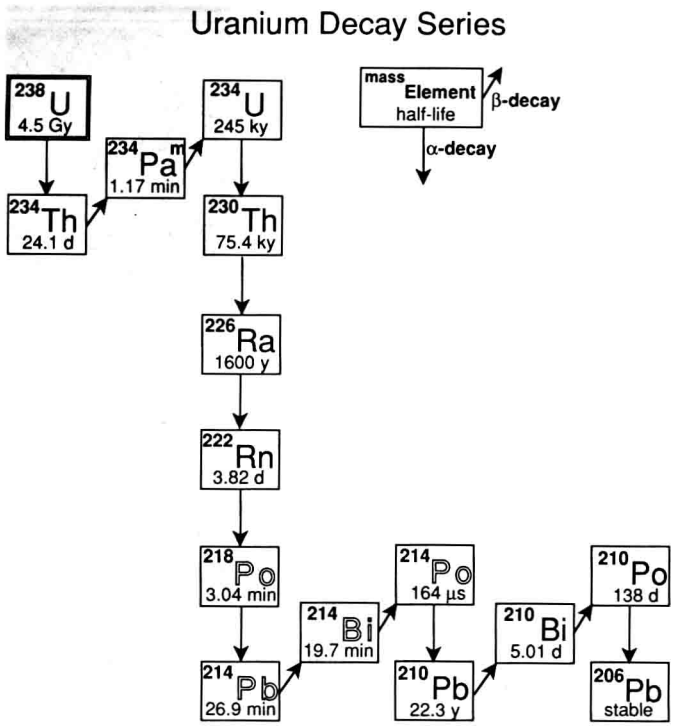

FIG. 1–^{238}U decay series, including ^{222}Rn and its decay products. Only the major decay branches are shown. The nuclides designated by the outline typeface are those whose inhalation and/or subsequent decay give rise to the health effects associated with exposure to ^{222}Rn. All half-lives except for those nuclides noted in Table 1, are from Ref *94*.

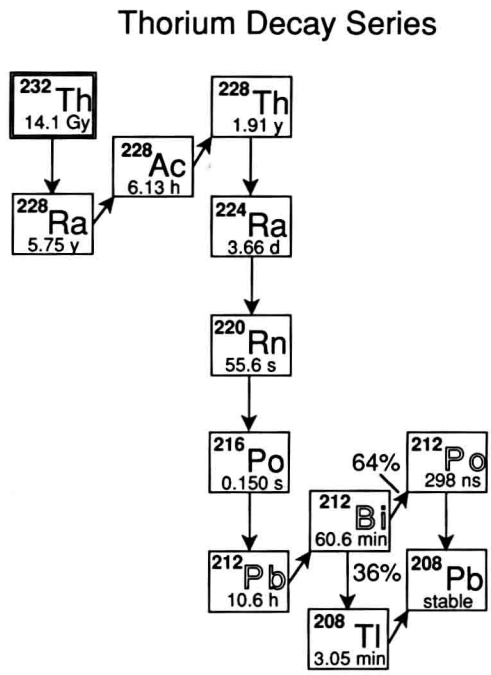

FIG. 2–The decay series for ^{232}Th, which includes ^{220}Rn and its decay products. The nomenclature for each nuclide and radioactive decay is the same as given in Fig. 1. Those nuclides responsible for the health effects associated with ^{220}Rn exposures are indicated by the outline typeface. Only the major decay branches are shown, and the branching ratios and half-lives are taken from Ref *94*.

average, the concentrations of ^{238}U and ^{232}Th in soils are about 30% lower than the average crustal concentrations [*8*]. Radioactive equilibrium (in this case, each of the decay products of these primordial nuclides, down to the gaseous radon isotopes, have approximately equal activity concentrations) is often observed, though not in all cases. Radium isotopes, like their original uranium or thorium sources, are also widely distributed in the earth's crust, and the radium concentration in soils is typically 40 Bq kg^{-1} (1 pCi g^{-1}). In general the observed values range from ~10 to 200 Bq kg^{-1} (0.3 to 5.4 pCi g^{-1}) for soils outside of areas with uranium mining and milling activities [*9*].

Due to the widespread presence of radium, the resulting ^{222}Rn and ^{220}Rn isotopes are ubiquitous constituents of the fluids present in soil pore spaces. Radium in crustal materials also accounts for the appearance of radon in groundwater, where the radon typically arises from the radium in the solid materials in which the aquifer is found, rather than coming from radium dissolved in the water. More details on radon and geology are presented in Chapter 6.

Each of the radon isotopes is radioactive. As illustrated in Figs. 1 and 2, these radioactive decays produce other radionuclides; referred to as radon decay products (alternative references in the literature are to radon progeny or to the more archaic term, radon daughters). Additional details regarding the half-lives, decay modes, and the alpha and gamma decay energies and intensities for ^{222}Rn and ^{220}Rn and their respective decay products are presented in Tables 1 and 2, beginning with their radium precursors. The behavior of radon decay products in indoor environments is discussed in greater detail later in this chapter.

Radioactive Decay—A Brief Primer

Radionuclides are inherently unstable; this property can be characterized by the half-title ($t_{1/2}$), which is the period of time it takes for one half of the initial quantity of radioactive atoms to radioactively decay. Radioactive decay is unaffected by any chemical interactions the radioactive atoms may undergo. The decays illustrated in Figs. 1 and 2, particularly beta decay, are often accompanied by the emission of one or more gamma rays. Some of the gamma decay energies associated with radon or thoron decay products are listed in Tables 1 and 2.

While a rigorous mathematical treatment of the equations describing radioactive growth and decay of a series of decay products is beyond the scope of this chapter, the main elements as they apply to radon and its decay products are provided here. Greater detail may be found in Ref *10* or in most standard texts on nuclear physics or nuclear chemistry. The equation describing the loss of atoms of a particular radionuclide by radioactive decay is

$$\frac{dN}{dt} = -N\lambda \tag{1}$$

TABLE 1—^{222}Rn decay series[a].

Nuclide	Half-Life	Decay Constant, λ (s^{-1})	Major Radiation Energies: E_α, MeV	Major Radiation Energies: E_γ, keV	Potential Alpha Energy Calculation: N, atoms Bq^{-1}	Potential Alpha Energy Calculation: ΣE_α, MeV $atom^{-1}$	Potential Alpha Energy Calculation: Fraction[b]
^{226}Ra	1600 years	1.37×10^{-11}	4.60 (6)[c]	...	7.3×10^{10}	...	...
	...	...	4.78 (94)	...	...	...	...
^{222}Rn	3.82 days	2.10×10^{-6}	5.49 (100)	...	4.8×10^{5}	...	...
^{218}Po	3.04 min[d]	3.80×10^{-3}	6.00 (~100)	...	263	13.69	0.104
^{214}Pb	26.9 min[e]	4.29×10^{-4}	...	242 (20)[f]	2329	7.69	0.517
	...	...	...	295 (52)	...	...	...
	...	...	...	352 (100)	...	...	...
^{214}Bi	19.7 min[e]	5.86×10^{-4}	...	609 (100)	1705	7.69	0.379
	...	...	...	1120 (33)	...	...	...
	...	...	...	1764 (35)	...	...	...
^{214}Po	164 μs	4.23×10^{3}	7.69 (100)	...	2×10^{-4}	7.69	0
^{210}Pb	22.3 years	9.86×10^{-10}	...	47 (100)	...	...	...
^{210}Bi	5.01 days	1.60×10^{-6}	...	...[g]	...	...	...
^{210}Po	138 days	5.81×10^{-8}	5.30 (100)	...	...	...	...
^{206}Pb	stable	...	...	...	...	...	...

[a]Except as noted, all data on half-lives, alpha- and gamma-decay energies, and decay intensities are from Ref *94*.
[b]Fraction of total alpha energy released, computed as $N_i \times (\Sigma E_\alpha)_i / \Sigma(N_i \times (\Sigma E_\alpha)_i)$.
[c]Fraction of total alpha decay.
[d]Half-life from Ref *95*.
[e]Half-life from Ref *96*.
[f]Fraction of decays proceeding by this mode (in percent), relative to the most intense gamma decay (=100).
[g]No gamma emissions accompany this beta decay.

where N is the number of radioactive atoms, λ is the radioactive decay constant for that species, and t is the time. The solution to this differential equation is given by

$$N(t) = N_0 e^{-\lambda t} \tag{2}$$

where the decay constant, λ, is related to the half-life by

$$\lambda = \frac{\ln 2}{t_{1/2}} \tag{3}$$

and N_0 is the number of radioactive atoms present initially (at time $t = 0$). The quantity $N\lambda$ is often referred to as the activity, designated by I (where $I_0 = N_0\lambda$). The equations relating the radioactive growth and decay equilibrium between two or more radioactive species (as in the case of the equilibrium established between radon and its decay products) are based on the same principles, although they are functionally more complicated. For the general case of $A \rightarrow B$, where both A and B are radioactive, the differential equation

TABLE 2—^{220}Rn decay series[a].

Nuclide	Half-Life	Decay Constant, λ (s^{-1})	Major Radiation Energies: E_α, MeV	Major Radiation Energies: E_γ keV	Potential Alpha Energy Calculation: N, atoms Bq^{-1}	Potential Alpha Energy Calculation: ΣE_α, (MeV $atom^{-1}$)[b]	Potential Alpha Energy Calculation: Fraction[c]
^{224}Ra	3.66 days	2.19×10^{-6}	5.45 (5)[d]	...	4.6×10^{5}	...	...
	...	...	5.69 (95)	241 (100)[e]	...	...	...
^{220}Rn	55.6 s	1.25×10^{-2}	6.29 (100)	...	80	...	...
^{216}Po	0.150 s	4.62	6.78 (100)	...	0.22	14.58	0
^{212}Pb	10.6 h	1.82×10^{-5}	...	239 (100)	5.5×10^{4}	7.80	0.913
	...	...	...	300 (8)	...	...	...
^{212}Bi	60.6 min	1.91×10^{-4}	...	...	5246	7.80	0.087
^{212}Bi α decay (36)[f]	...	...	6.05 (25)	...	...	...	...
	...	...	6.09 (10)	...	...	...	...
^{208}Tl	3.05 min	3.79×10^{-3}	...	511 (22)	...	...	...
	...	...	...	583 (86)	...	...	...
	...	...	...	860 (12)	...	...	...
	...	...	...	2615 (100)	...	...	...
^{208}Pb	stable	...	...	...	...	...	...
^{212}Bi β decay (64)[f]	...	...	...	727 (100)	...	...	...
	...	...	...	786 (2)	...	...	...
	...	...	...	1621 (2)	...	...	...
^{212}Po	298 ns	2.33×10^{6}	8.78 (100)	...	4×10^{-7}	5.62	0
^{208}Pb	stable	...	...	...	...	...	...

[a]All data on half-lives, alpha- and gamma-decay energies, and decay intensities are from Ref *94*.
[b]Alpha decay energies, weighted by ^{212}Bi branching ratios.
[c]Fraction of total alpha energy released, computed as $N_i \times (\Sigma E_\alpha)_i / \Sigma(N_i \times (\Sigma E_\alpha)_i)$.
[d]Fraction of total alpha decay.
[e]Fraction of decays proceeding by this mode, relative to the most intense gamma decay (=100).
[f]Fraction of total ^{212}Bi decay.

此为试读，需要完整PDF请访问：www.ertongbook.com