PC/AT286

电路原理图

《计算机科学技术与应用》编辑部

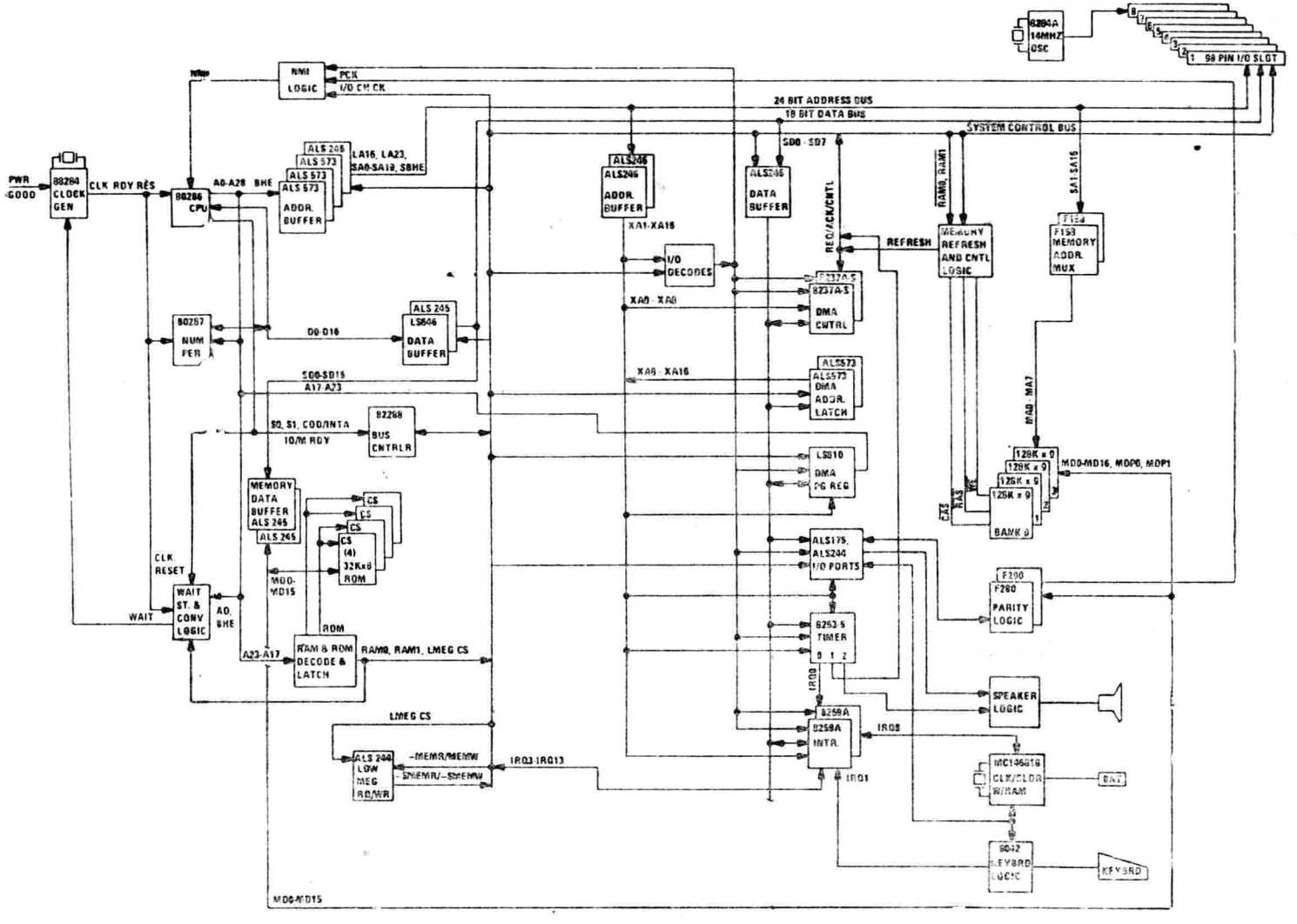

System Board Block Diagram

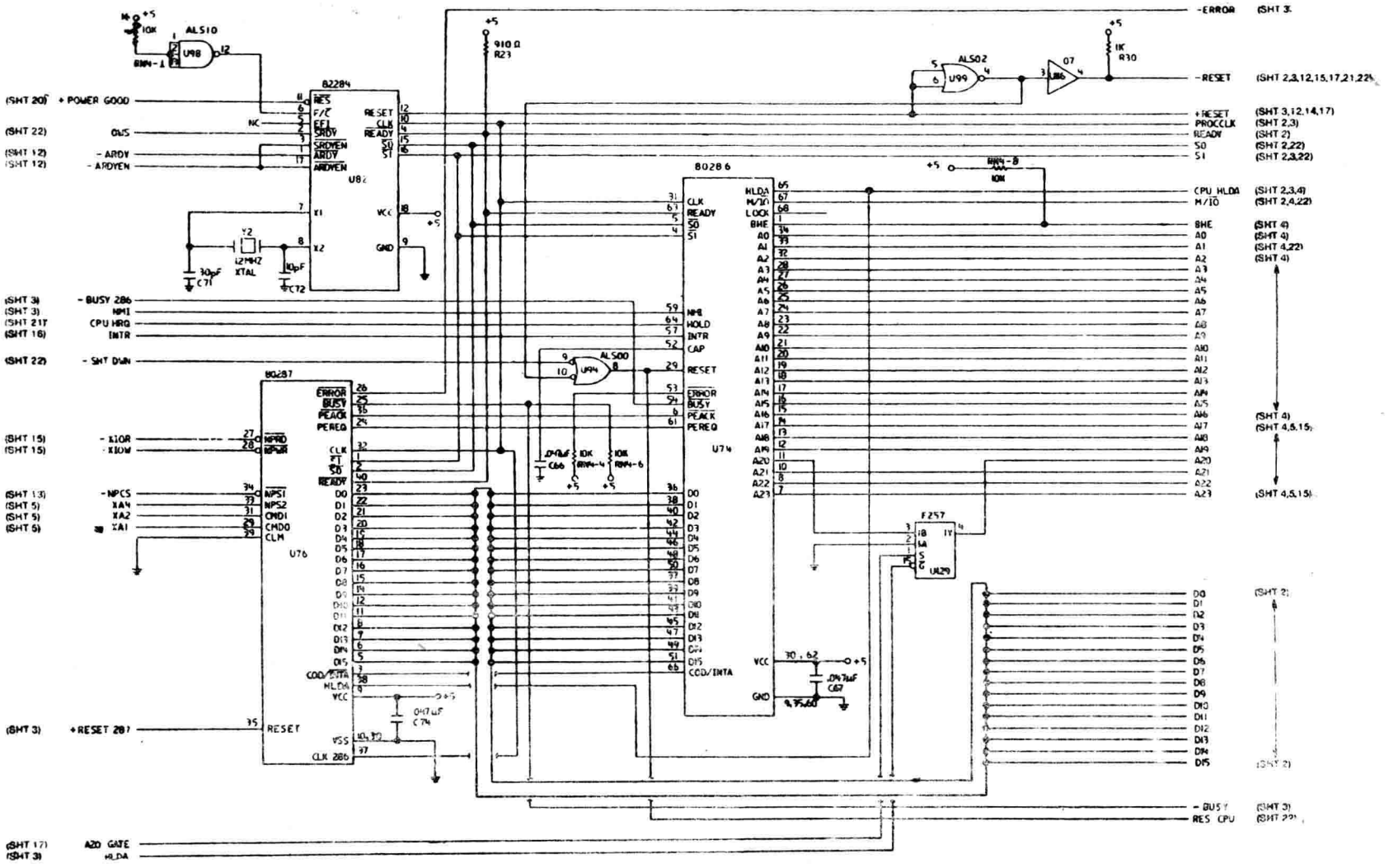

System Board (Sheet 1 of 22)

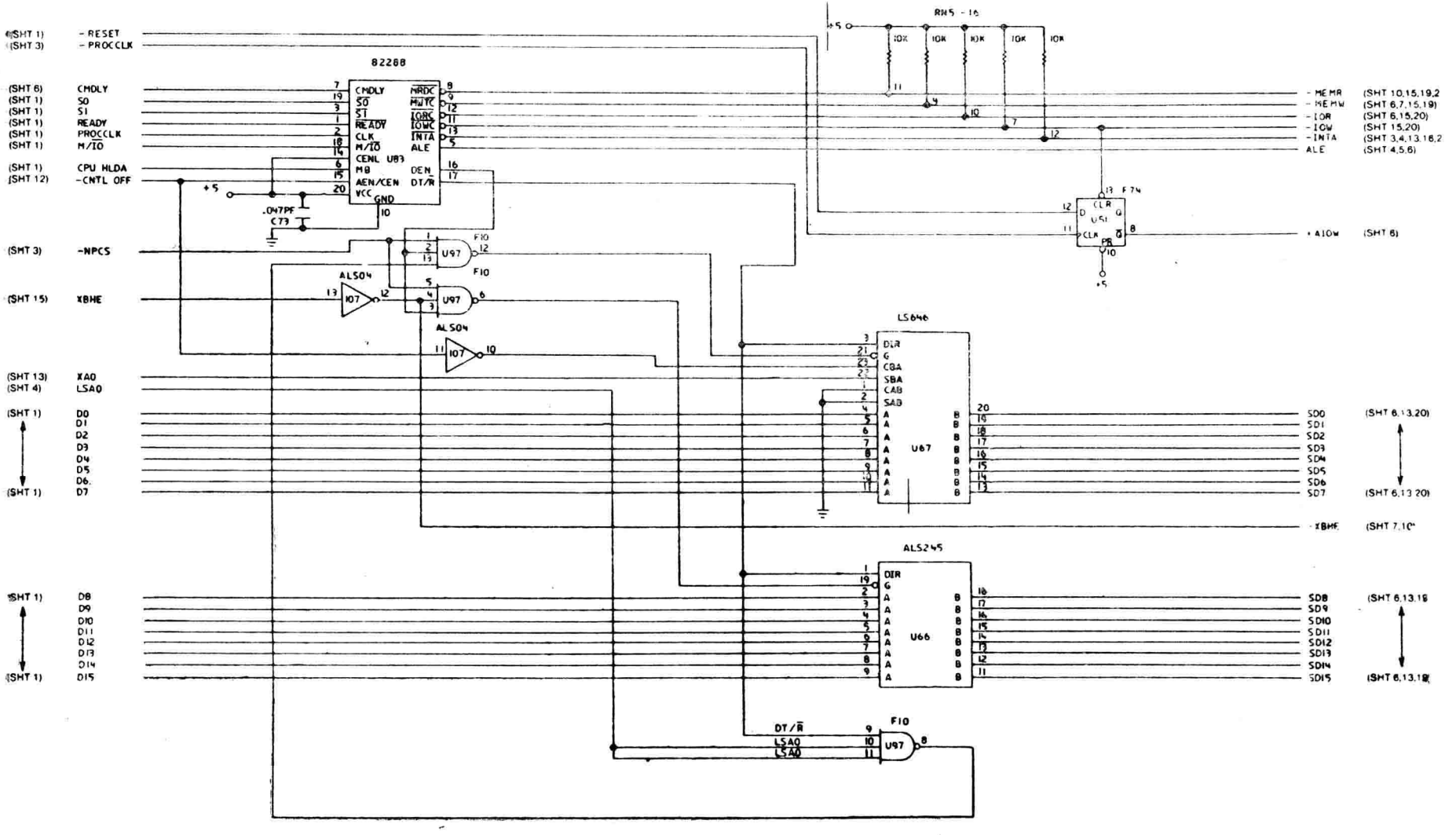

System Board (Sheet 2 of 22)

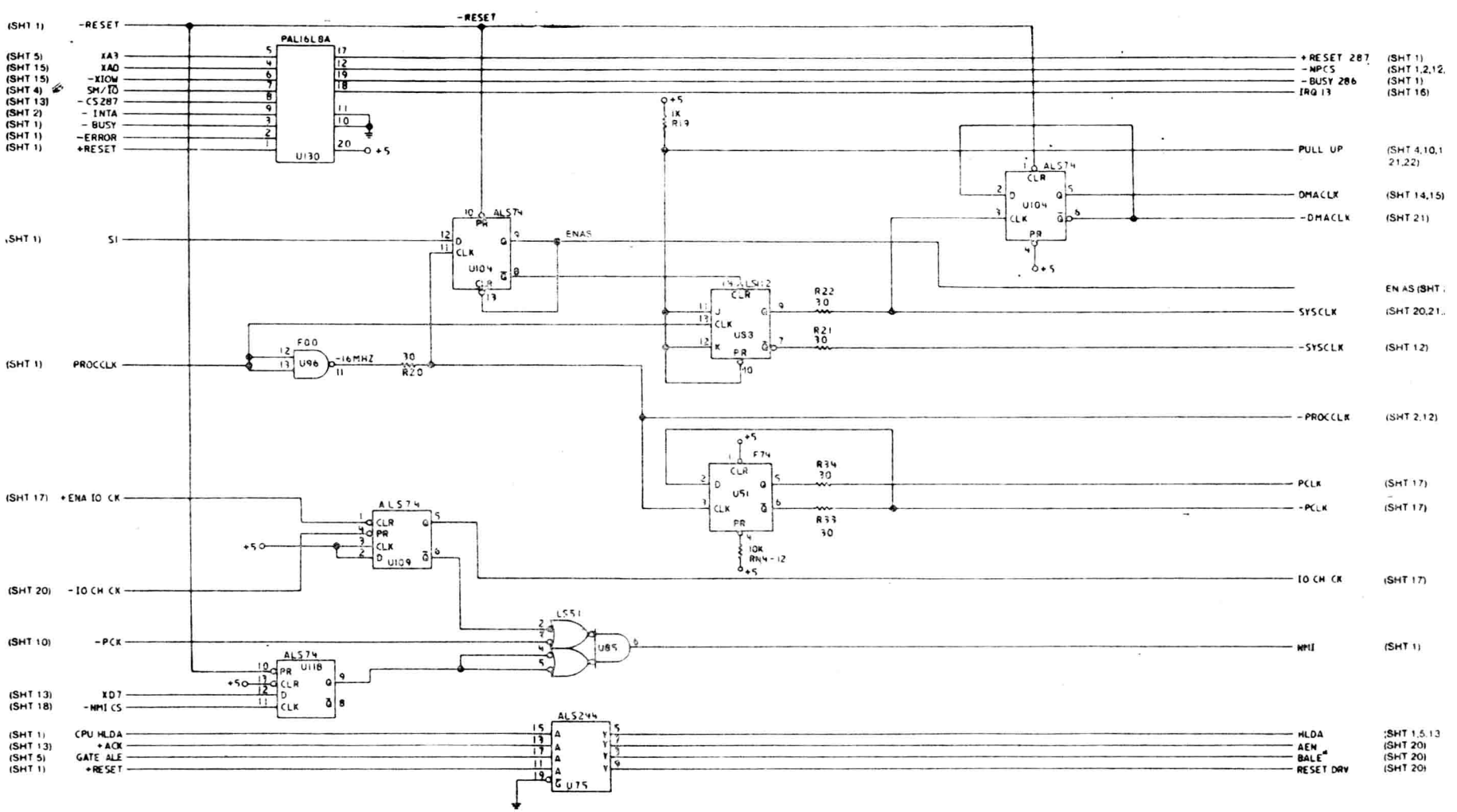

System Board (Sheet 3 of 22)

此为试读,需要完整PDF请访问: www.ertongbook.com

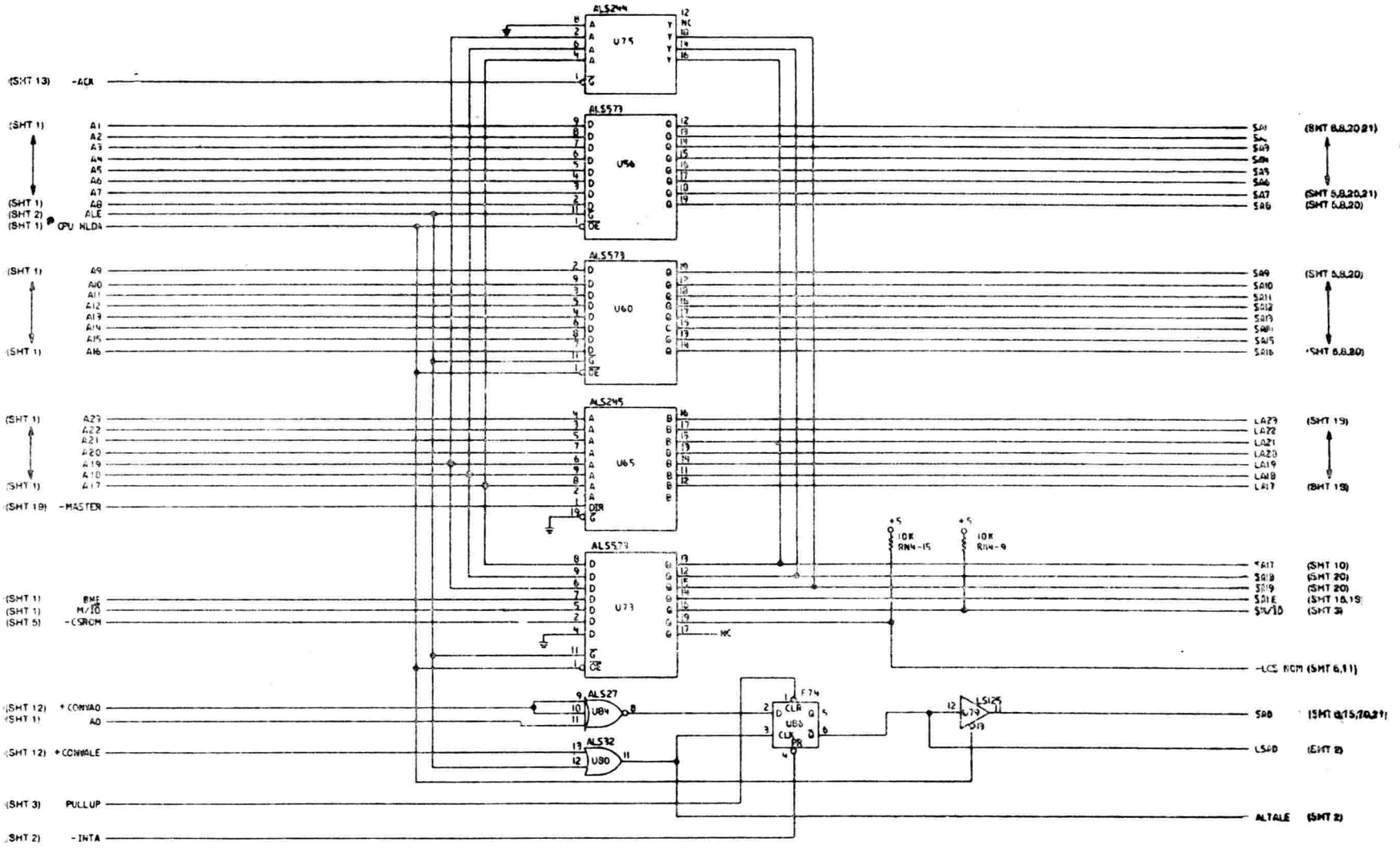

System Board (Sheet 4 of 22)

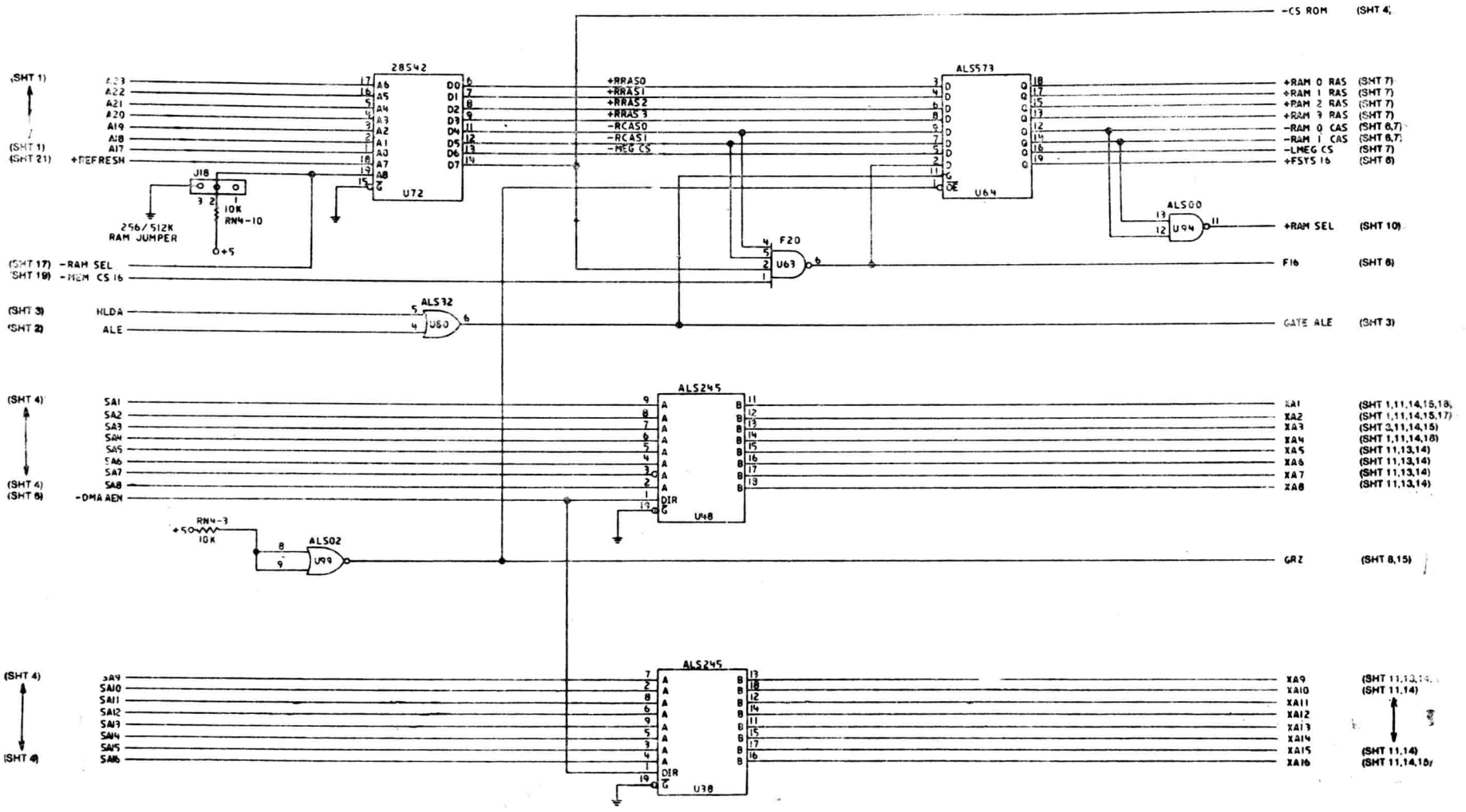

System Board (Sheet 5 of 22)

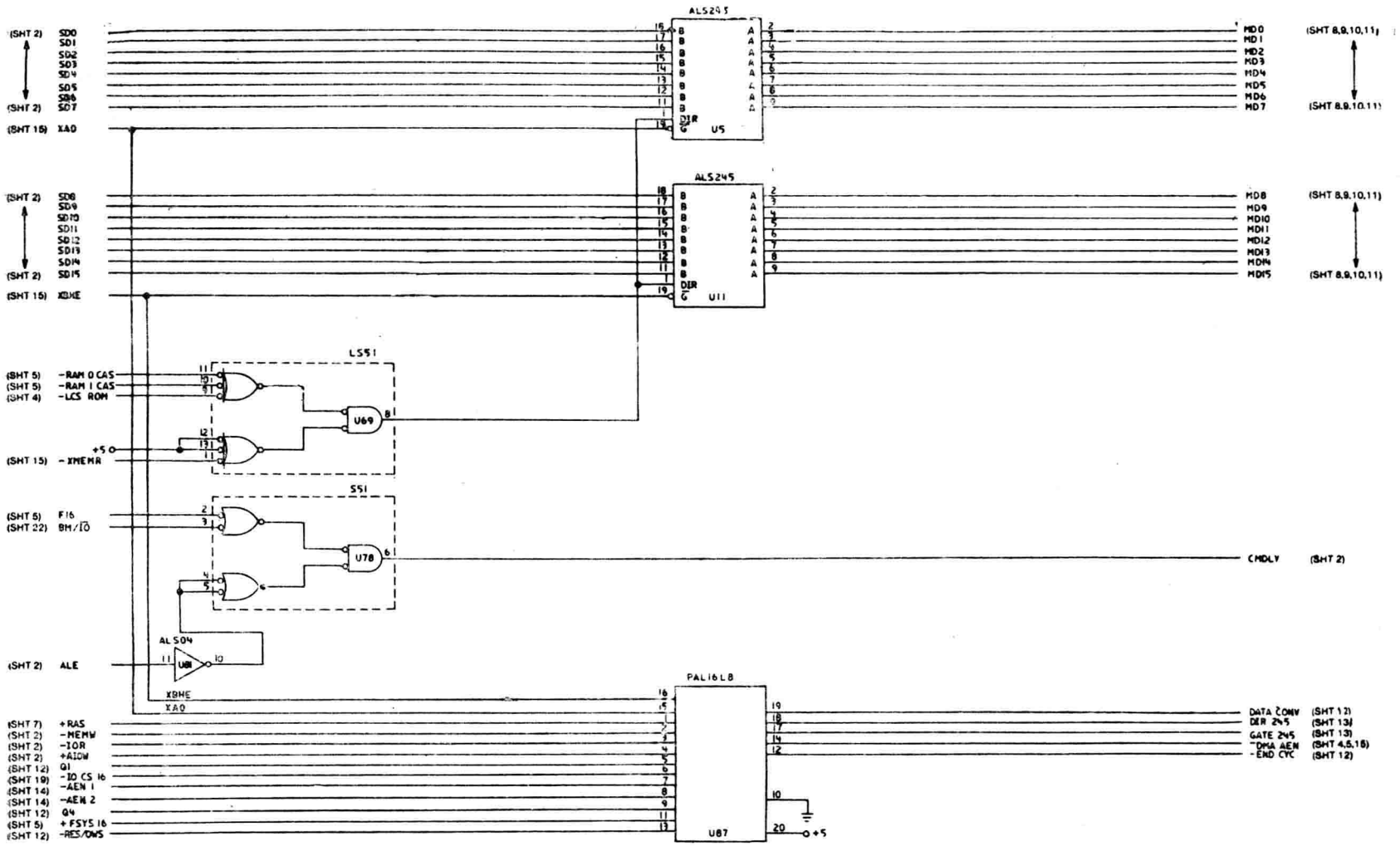

System Board (Sheet 6 of 22)

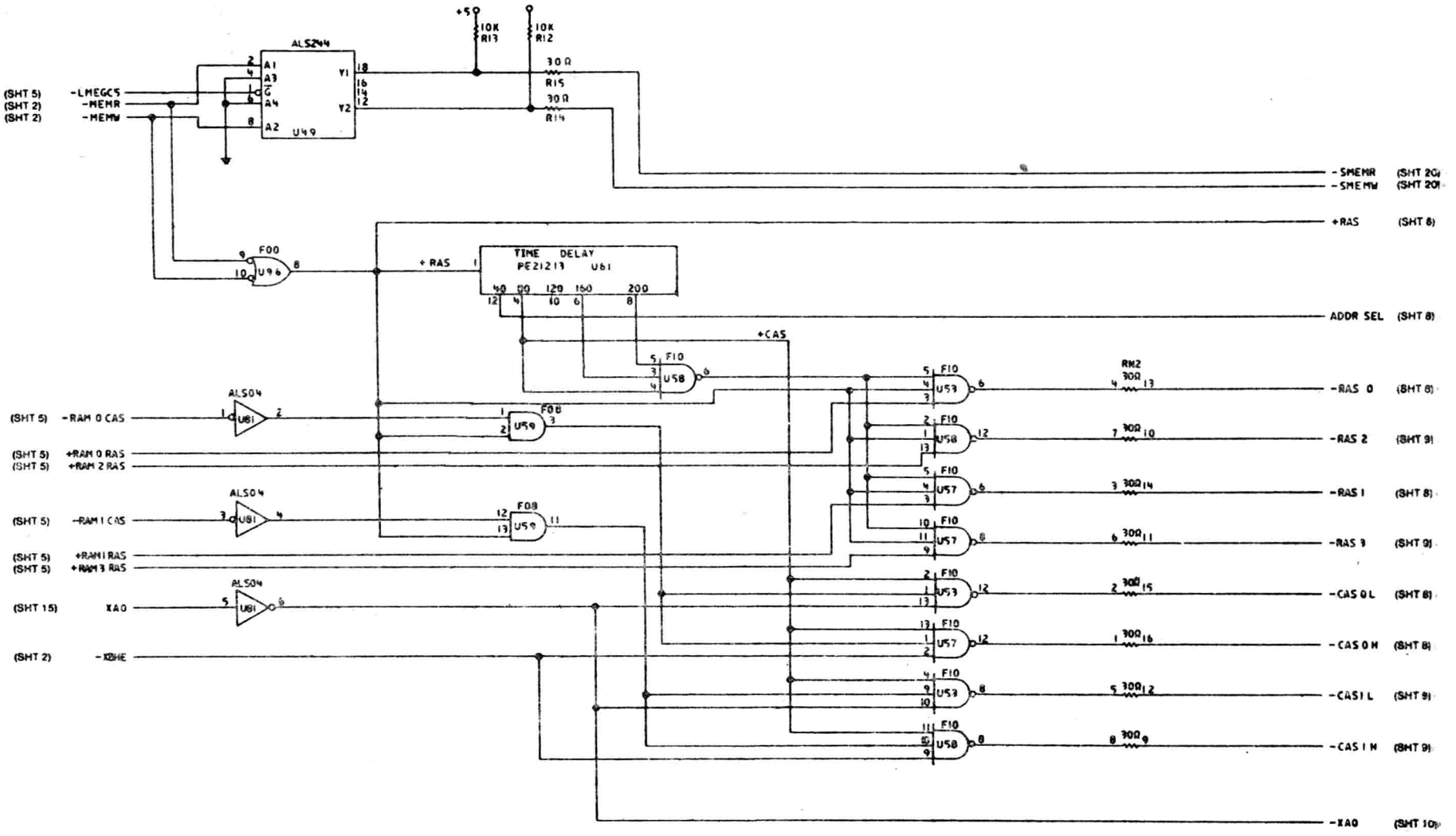

System Board (Sheet 7 of 22)

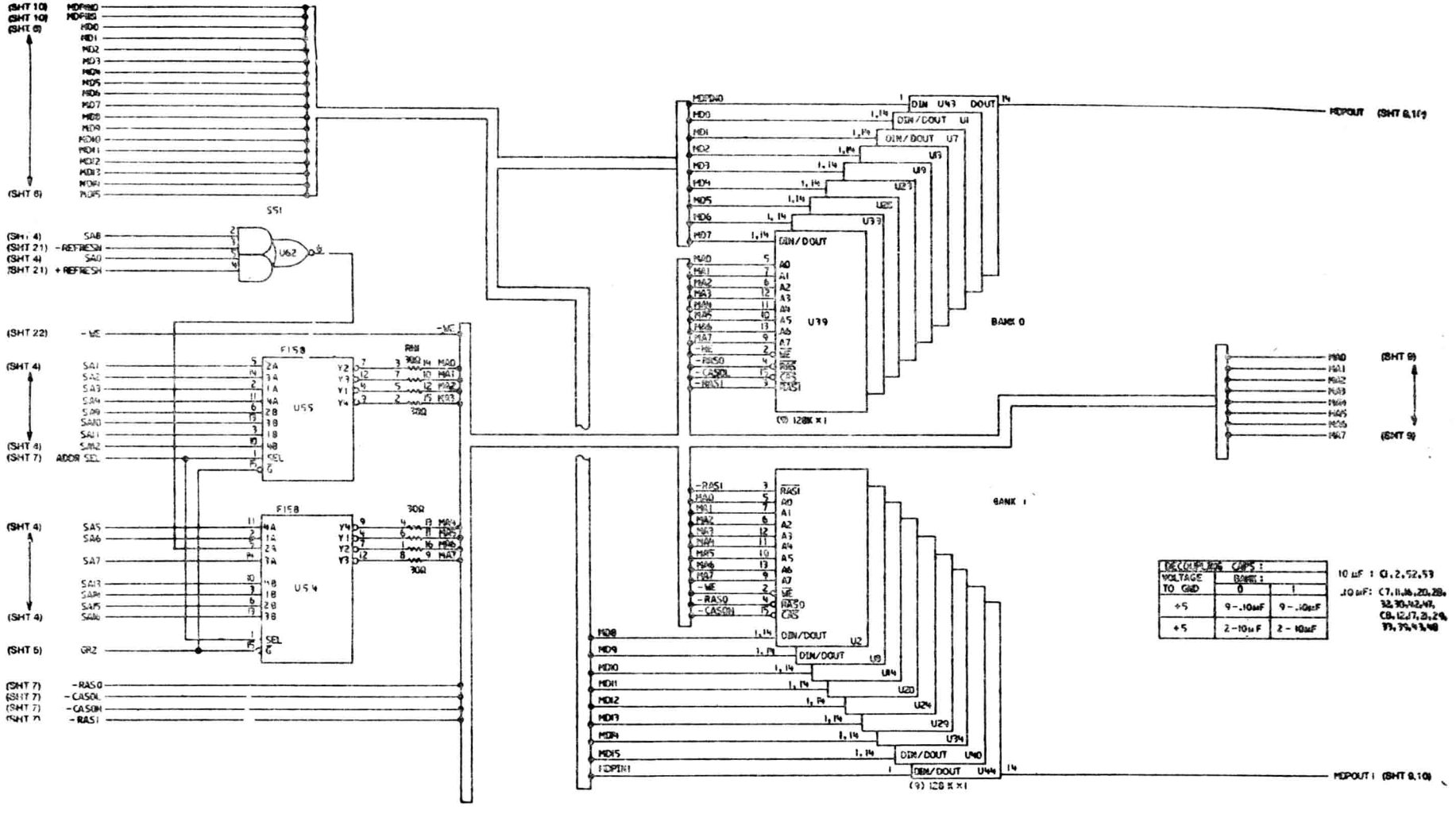

System Board (Sheet 8 of 22)

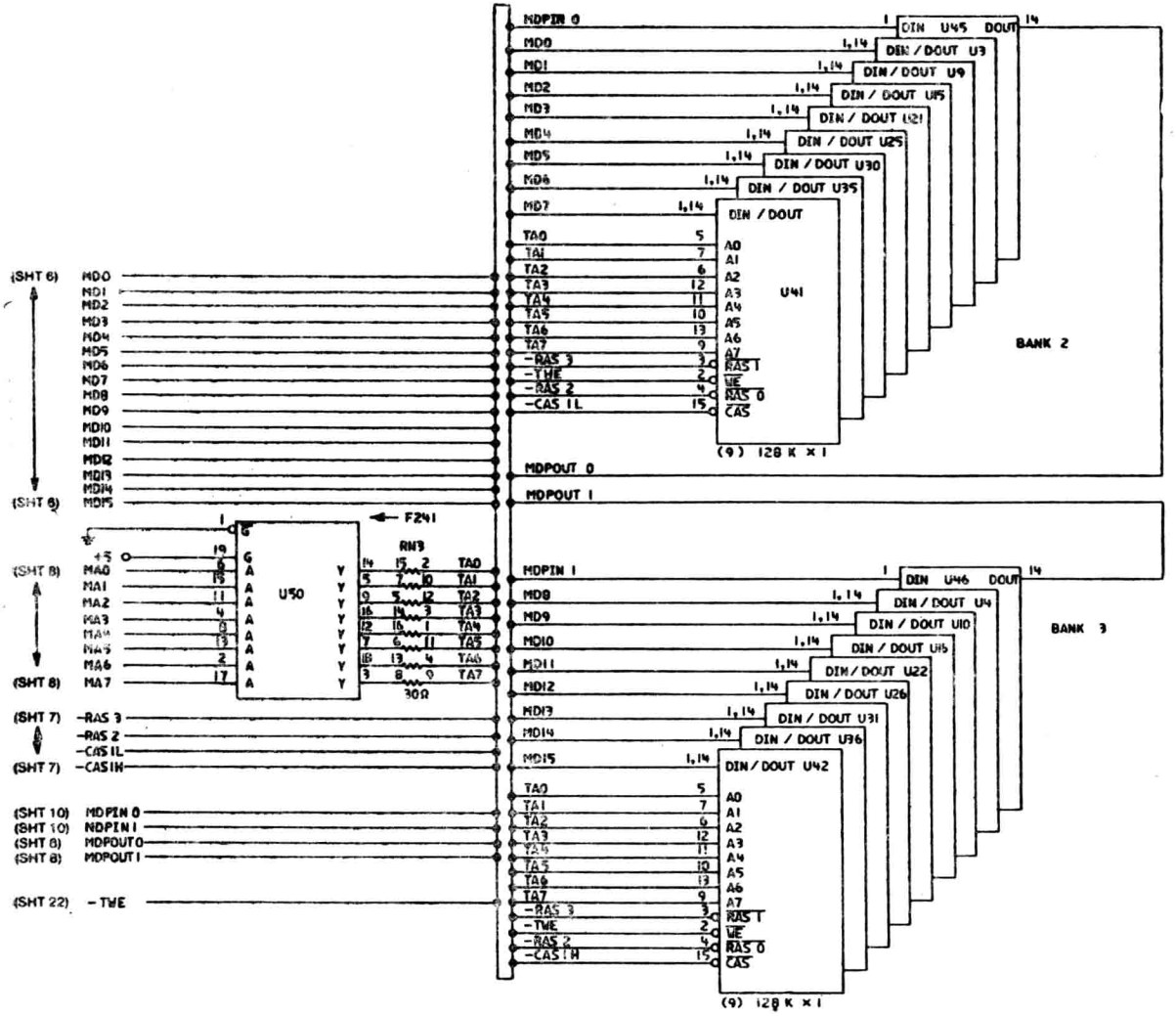

DECOUPLING CAP:		
VOLTAGE TO GND	BANK 2	BANK 3
+ 5	9-.10µF	9-.10µF
+ 5	2-10µF	2-10µF

10µF : C3,4,54,55

.10µF: C9,13,18,22,30 34,40,44,49 C10,14,19,23,3 35,41,45,50

System Board (Sheet 9 of 22)

此为试读,需要完整PDF请访问: www.ertongbook.com

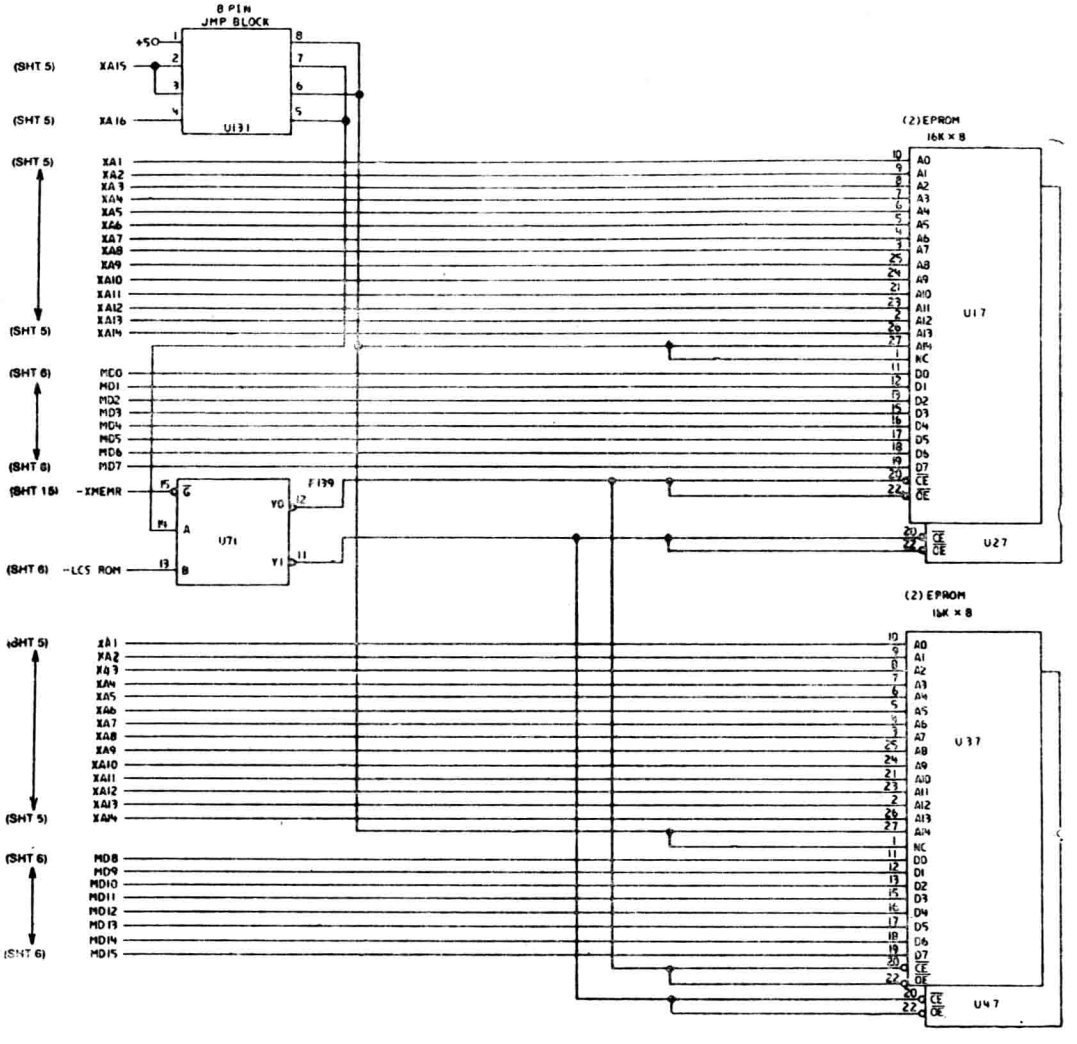

System Board (Sheet 10 of 22)

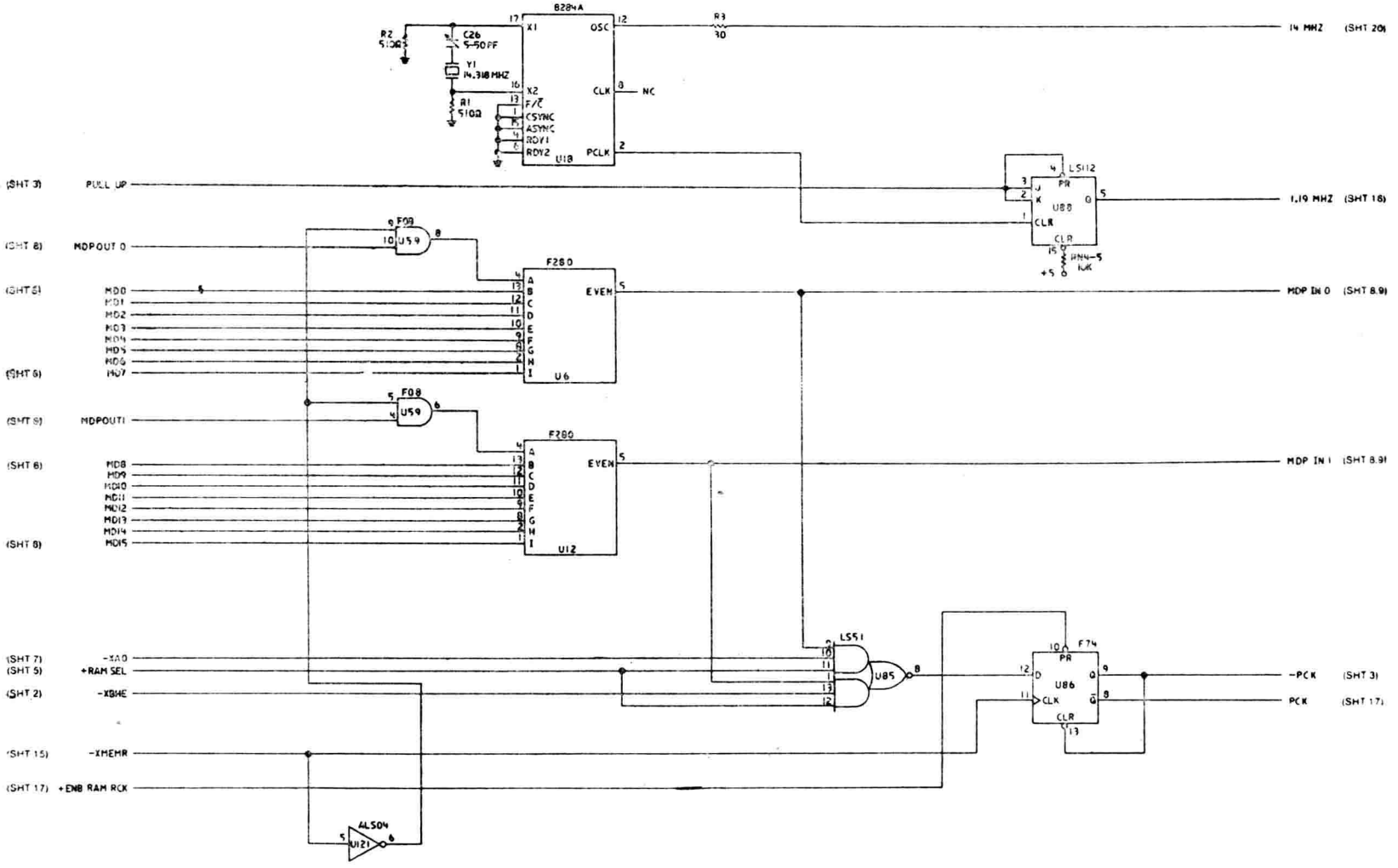

System Board (Sheet 11 of 22)

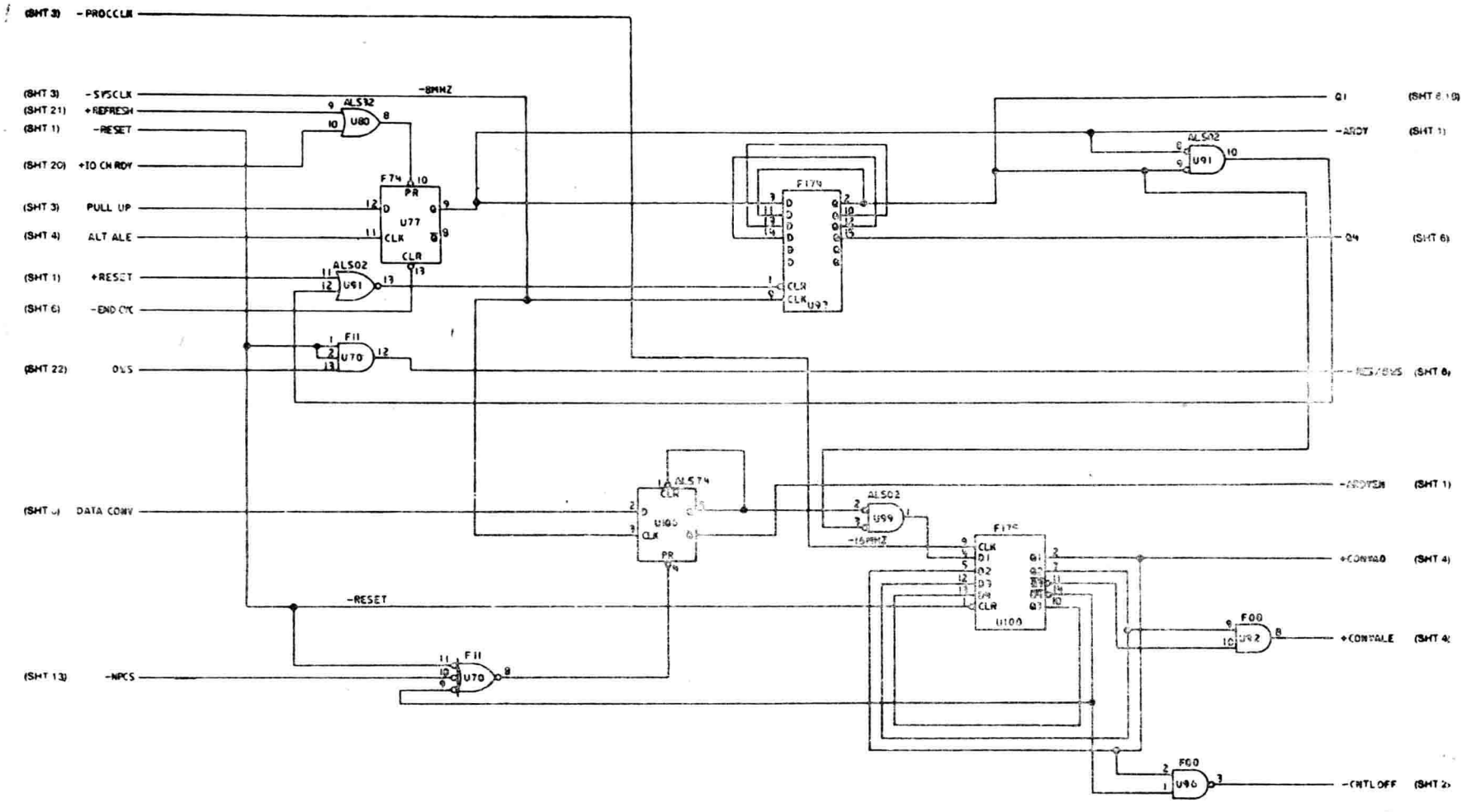

System Board (Sheet 12 of 22)

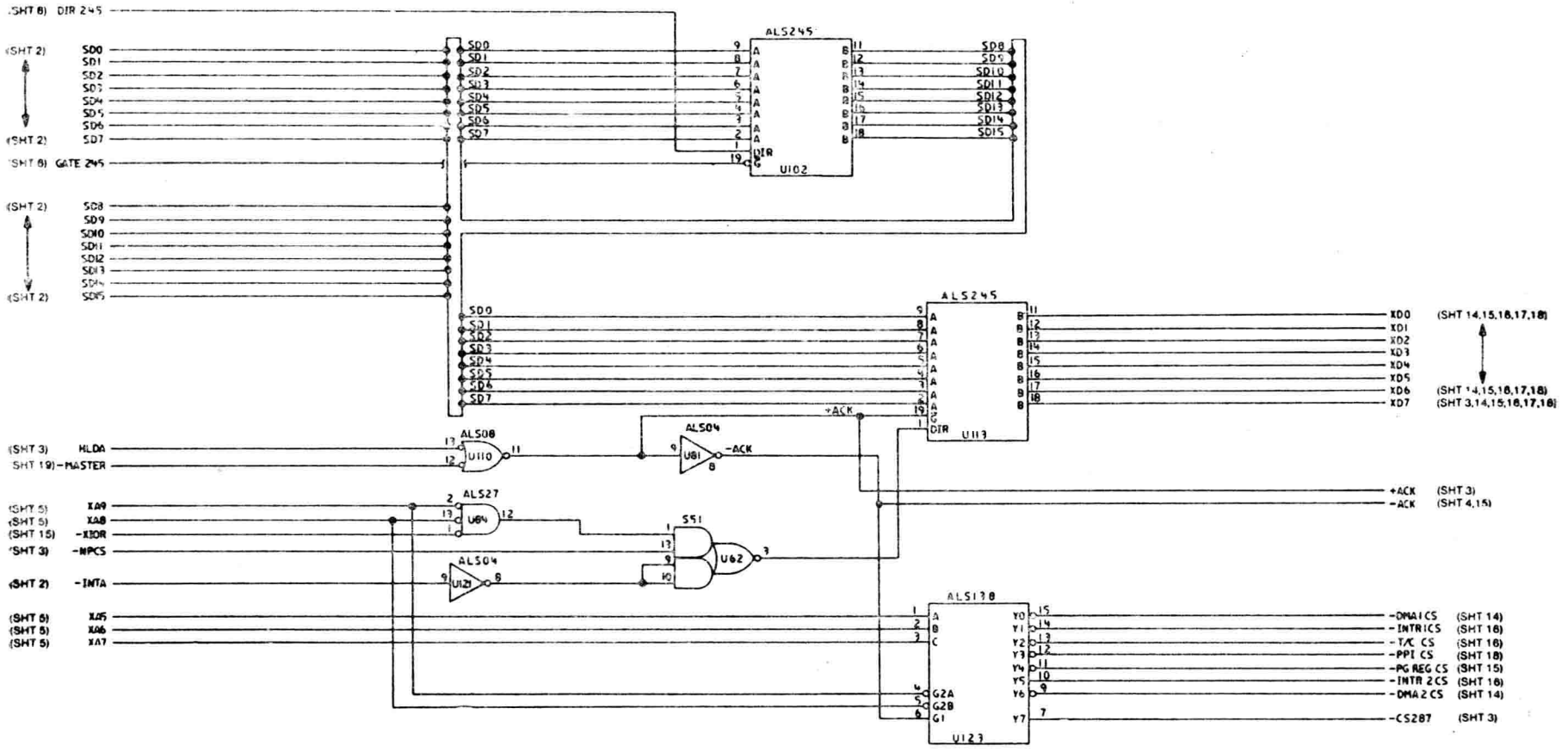

System Board (Sheet 13 of 22)

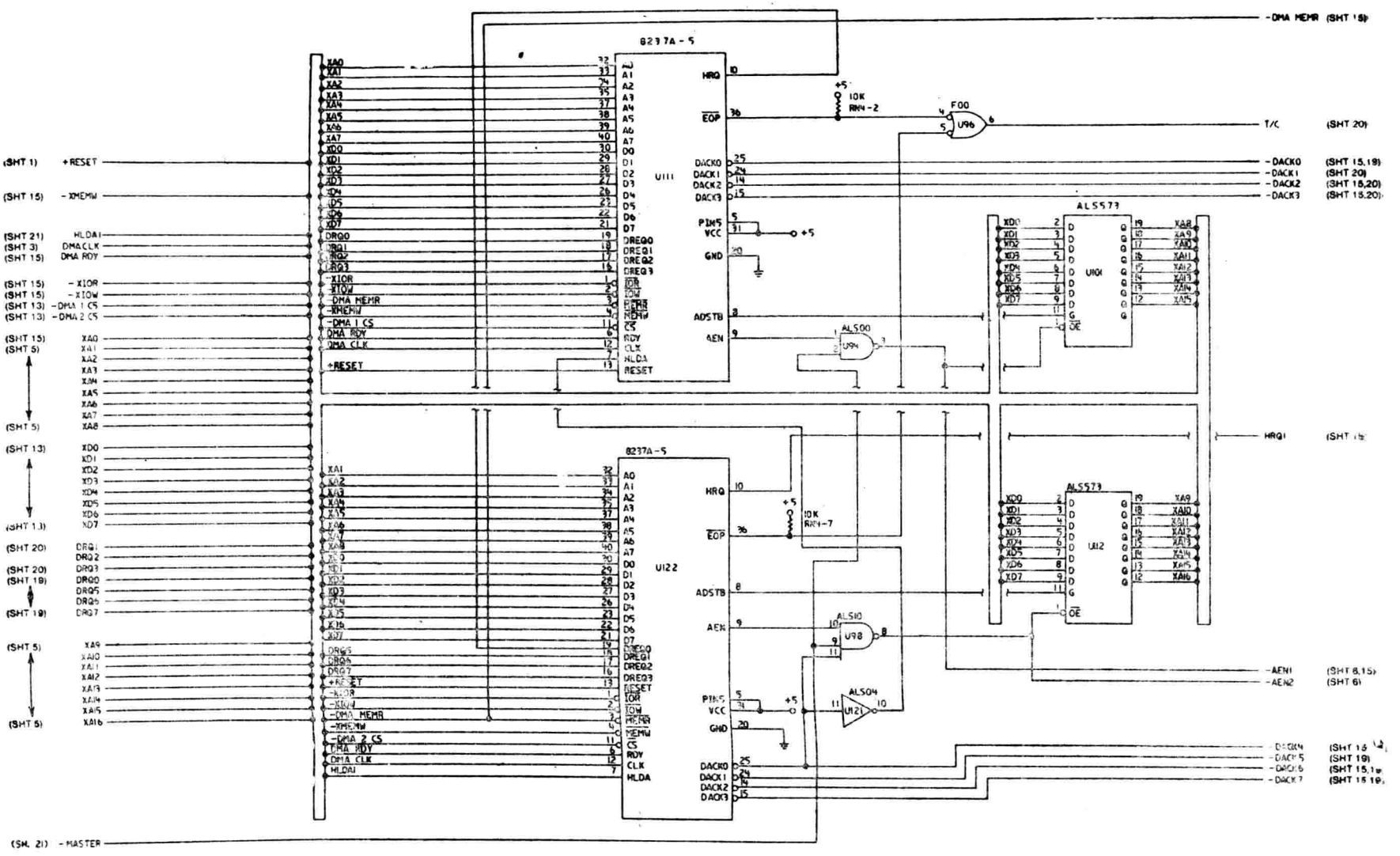

System Board (Sheet 14 of 22)

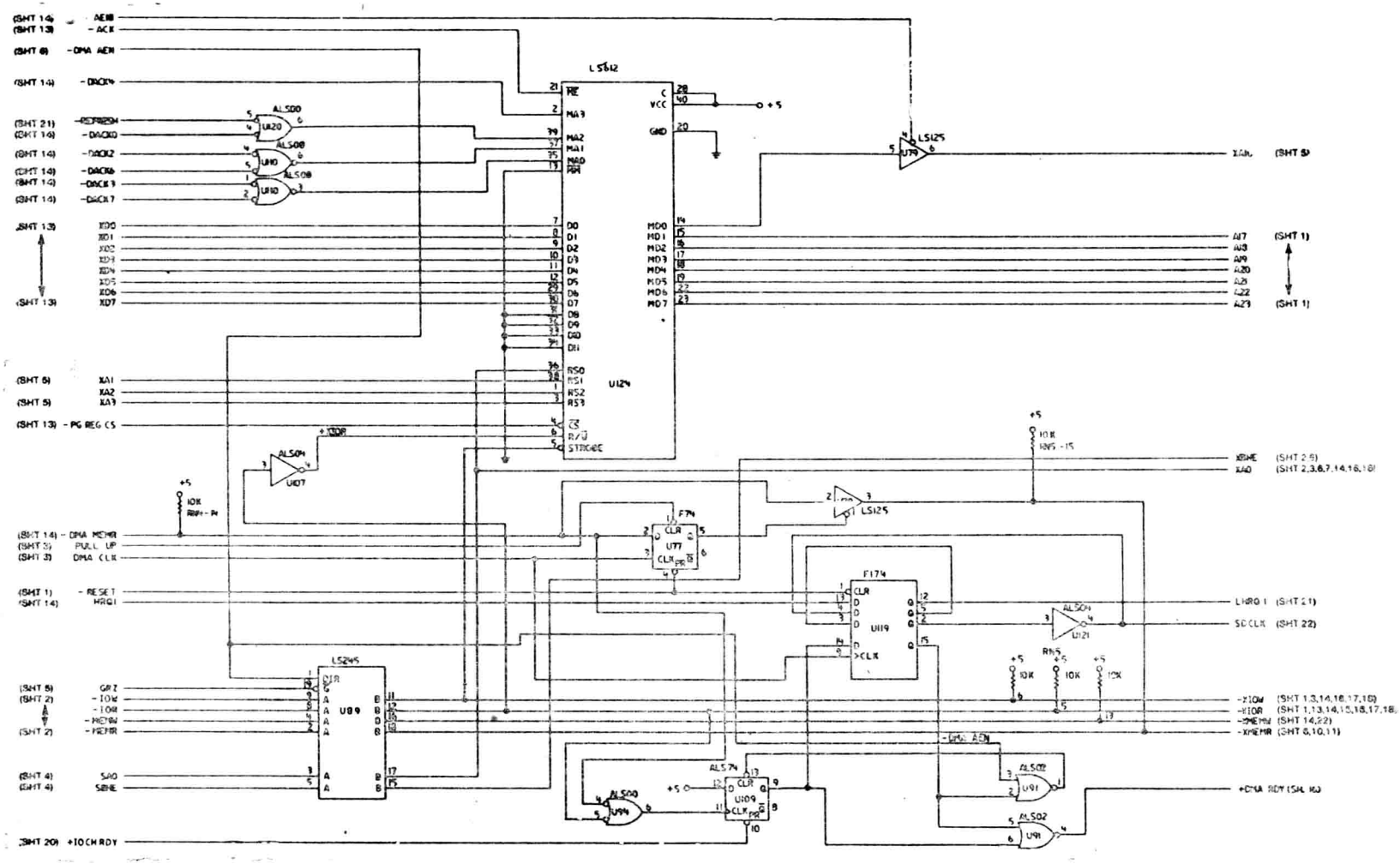

System Board (Sheet 15 of 22)

此为试读，需要完整PDF请访问：www.ertongbook.com