Fundamentals of Power Electronics

Nelson Bolívar, Ph.D

ArclerPress

Fundamentals of Power Electronics

Power electronics is defined as the application of solid-state electronics to the control and conversion of electric power. It also refers to a subject of research in electronic and electrical engineering that deals with the design, control, computation, time-varying energy-processing electronic systems with fast dynamics. Power electronic converters can be found wherever there is a need to modify the electrical energy form. With "classical" electronics, electrical currents and voltage are used to carry information, whereas with power electronics, they carry power. Some examples of uses for power electronic systems are DC/DC converters used in many mobile devices, such as cell phones or PDAs, and AC/DC converters in computers and televisions. Large scale power electronics are used to control hundreds of megawatt of power flow across our nation. Research in this area includes power electronics applications to control large scale power transmission and distribution as well as the integration of distributed and renewable energy sources into the grid. It is estimated that by the year 2030, more than 80% of all electrical energy will be processed by power electronics. The advantages continue to grow for technical engineers who understand the fundamental principles and technical requirements of modern power conversion systems. Fundamentals of Power Electronics covers design-oriented analysis, modeling and simulation techniques leading to practical engineering of high-performance power electronics systems. This book will lead you to practical examples of the most relevant concepts and methods. Power electronics applications are extended to various fields such as Aerospace, Automotive electrical and electronic systems, commercial, industrial, residential, telecommunication, transportation, utility systems, etc. In case of automotive electronics, the electrically-generated systems are used in automobiles such as road vehicles like telematics, in-car entertainment systems, carputers, and so on. The need to control engines of automobiles originated in automotive electronics for proper controlling and conversion. Application of power electronics in automotive applications plays a major role in controlling automotive electronics. Automotive electronics include modern electric power steering, HEV main inverter, central body control, braking system, seat control, and so on. Application of power electronics in the automotive power generation system provides automotive alternators with improved efficiency and high power, along with high temperature withstanding capacity and high-power density with a variety of research in designing of alternator with a switched mode power electronics applications. The frequently used alternator in automotive applications is Lundell or Claw-pole alternator, as it is suitable for the required emerging performance. Field and armature characteristics of this alternator are enhanced by the use of power electronics. These alternators are used in automobiles for supplying power to the batteries and electrical system while the engine is running. Automotive alternators require a power electronic voltage regulator for producing a constant voltage at the battery terminals by modulating small field current.

Nelson Bolivar has a PhD. in physics from the University of Lorraine in France finished in 2014. His expertise is in quantum systems and condensed matter. His interest includes spintronic devices and correspondences between general relativity and condensed matter. He is currently an associate professor at the Central University of Venezuela

ArclerPress

ISBN 978-1-68094-405-1

9 781680 944051 00000

Bolívar

Fundamentals of Power Electronics

ArcLerPress

Fundamentals of Power Electronics

Editor:

Nelson Bolívar, Ph.D

ArclerPress

www.arclerpress.com

Fundamentals of Power Electronics

Editor: Nelson Bolívar, Ph.D

© 2017 Arcler Press LLC
708 3rd Avenue, 6th Floor
New York
NY 10017
United States of America
www.arclerpress.com

ISBN: 978-1-68094-405-1

Library of Congress Control Number: 2016951060

This book contains information obtained from highly regarded resources. Reprinted material sources are indicated. Copyright for individual articles remains with the authors as indicated. A Wide variety of references are listed. Reasonable efforts have been made to publish reliable data and views articulated in the chapters are those of the individual contributors, and not necessarily those of the editors or publishers. Editors or publishers are not responsible for the accuracy of the information in the published chapters or consequences of their use. The publisher believes no responsibility for any damage or grievance to the persons or property arising out of the use of any materials, instructions, methods or thoughts in the book. The editors and the publisher have attempted to trace the copyright holders of all material reproduced in this publication and apologize to copyright holders if permission has not been obtained. If any copyright holder has not been acknowledged, please write to us so we may rectify.

Notice: Registered trademark of products or corporate names are used only for explanation and identification without intent of infringement.

Arcler Press LLC publishes wide variety of books and eBooks. For more information about Arcler Press and its products, visit our website at www.arclerpress.com

试读结束：需要全本请在线购买： www.ertongbook.com

Fundamentals of Power Electronics

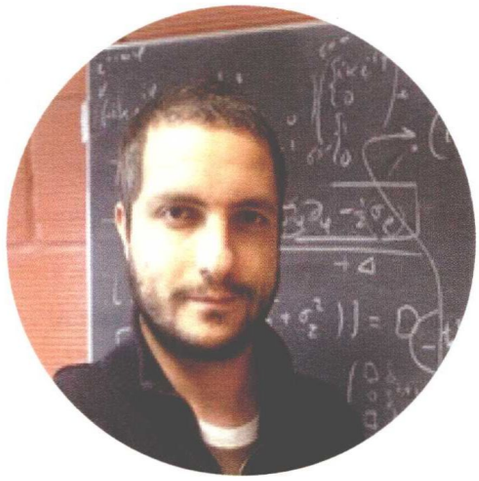

About the Editor

Nelson Bolívar, Ph.D

Nelson Bolivar has a PhD. in physics from the University of Lorraine in France finished in 2014. His expertise is in quantum systems and condensed matter. His interest includes spintronic devices and correspondences between general relativity and condensed matter. He is currently an associate professor at the Central University of Venezuela

List of Contributors

Md. Khalilur Rahman
Department of Physics, Comilla University, Comilla, Bangladesh

Abul Monsur Mohammed Musa
Department of Physics, University of Chittagong, Chittagong, Bangladesh

Budrun Neher
Department of Physics, Comilla University, Comilla, Bangladesh

Kawchar Ahmed Patwary
Department of Physics, Comilla University, Comilla, Bangladesh

Mohammad Atiqur Rahman
Department of Chemistry, Comilla University, Comilla, Bangladesh

Md. Shariful Islam
Department of ICT, Comilla University, Comilla, Bangladesh

Yuri Tanovitski
Tomsk State University of Control Systems and Radioelectronics, Tomsk, Russia

Gennady Kobzev
Tomsk State University of Control Systems and Radioelectronics, Tomsk, Russia

Adrien Deline
Ampère Laboratory, University of Lyon, Lyon, France

Denis Labrousse
Ampère Laboratory, University of Lyon, Lyon, France

Olivier Fabrègue
Ampère Laboratory, University of Lyon, Lyon, France

Christian Vollaire
Ampère Laboratory, University of Lyon, Lyon, France

Jérôme Grando
Plastic Omnium, Auto Exterior, Sigmatech, Lyon, France

Gérald André
Plastic Omnium, Auto Exterior, Sigmatech, Lyon, France

Michał Tadeusiewicz
Faculty of Electrical, Electronic, Computer and Control Engineering, Technical University of Lodz, Lodz, Poland

Andrzej Kuczynski
Faculty of Electrical, Electronic, Computer and Control Engineering, Technical University of Lodz, Lodz, Poland

B. Bati
Department of Physics, Faculty of Science, University of Yüzüncüyıl, Van, Turkey

Doutreloigne Jan
Centre for Microsystems Technology (CMST), Interuniversity Microelectronics Centre (IMEC) and University of Gent, Gent, Belgium

Huabo Shi
Sichuan Electric Power Research Institute China

Xiaoyan Zhou
Sichuan University China

Nader N. Barsoum
Curtin University of Technology, Miri, Malaysia

Meifang Xue
School of Electrical Engineering, Beijing Jiaotong University, Beijing, China

Mingzhi He
School of Electrical Engineering, Beijing Jiaotong University, Beijing, China

Jin Young Choi
Electronic and Electrical Engineering Departmet, Hongik University, Jochiwon, Korea

Amine Touati
Laboratory of Microelectronics and Instrumentation, Faculty of Sciences of Monastir, University of Monastir, Monastir, Tunisia

Samir Chatbouri
Laboratory of Microelectronics and Instrumentation, Faculty of Sciences of Monastir, University of Monastir, Monastir, Tunisia

Nabil Sghaier
Laboratory of Microelectronics and Instrumentation, Faculty of Sciences of Monastir, University of Monastir, Monastir, Tunisia

Adel Kalboussi
Laboratory of Microelectronics and Instrumentation, Faculty of Sciences of Monastir, University of Monastir, Monastir, Tunisia

Ikkyun Jo
Graduate School of Engineering, Osaka University, Osaka, Japan

Toshimasa Matsuoka
Graduate School of Engineering, Osaka University, Osaka, Japan

Hassan Jassim Motlak
Electrical Department, College of Engineering, Babylon University, Babylon, Iraq

Viranjay M. Srivastava
Department of Electronics and Communication Engineering, Jaypee University of Information Technology, Solan, India

K. S. Yadav
VLSI Design Group, Central Electronics Engineering Research Institute (CEERI), Pilani, India

G. Singh
Department of Electronics and Communication Engineering, Jaypee University of Information Technology, Solan, India

Haider Ali
CIIT, Abbottabad, Pakistan

Mohamed Z. H. Qawaqzeh
Faculty of Engineering, Al-Balqa' Applied University, Amman, Jordan

Muhammad Abbas
CIIT, Abbottabad, Pakistan

Takialddin Al Smadi
Department of Communications and Electronics Engineering, College of Engineering, Jerash University, Jerash, Jordan

Mohammad Ali Tavakkoli
Department of Electrical Engineering, K. N. Toosi University of Technology, Tehran, Iran

Ahmad Radan
Department of Electrical Engineering, K. N. Toosi University of Technology, Tehran, Iran

Houshang Hassibi
Department of Electrical Engineering, K. N. Toosi University of Technology, Tehran, Iran

Nicholas Opiyo
Energy Research Institute, SCAPE, University of Leeds, Leeds, UK

Ah-Jin Cho
School of Integrated Technology, Yonsei University, 85 Songdoguahak-ro, Incheon 406-840, Korea
Yonsei Institute of Convergence Technology, 85 Songdoguahak-ro, Incheon 406-840, Korea

Kee Chan Park
Department of Electronic Engineering, Konkuk University, 120 Neungdong-ro, Seoul 143-701, Korea

Jang-Yeon Kwon
School of Integrated Technology, Yonsei University, 85 Songdoguahak-ro, Incheon 406-840, Korea
Yonsei Institute of Convergence Technology, 85 Songdoguahak-ro, Incheon 406-840, Korea

D. Thalapathi Udhayakumar
Department of Electrical and Electronics Engineering, Christian College of Engineering and Technology, Oddanchtram, Dindigul, Tamil Nadu, India

P. S. Manoharan
Department of Electrical and Electronics Engineering, Thiagarajar College of Engineering, Madurai, Tamil Nadu, India

Zhuo Zhang
Power Supply Company of Zhengzhou, Henan, China

试读结束：需要全本请在线购买： www.ertongbook.com

Hongwei Li
Power Supply Company of Zhengzhou, Henan, China

Bashar Khasawneh
Department of Electrical and Computer Engineering, Oakland University, Rochester, Michigan, USA

Maha Sabra
Department of Electrical and Computer Engineering, Oakland University, Rochester, Michigan, USA

Mohamed A. Zohdy
Department of Electrical and Computer Engineering, Oakland University, Rochester, Michigan, USA

Zunfang Chu
Key Laboratory of Power Electronics and Electric Drive, Institute of Electrical Engineering, Chinese Academy of Sciences, Beijing, China

Zixin Li
Key Laboratory of Power Electronics and Electric Drive, Institute of Electrical Engineering, Chinese Academy of Sciences, Beijing, China

Ping Wang
Key Laboratory of Power Electronics and Electric Drive, Institute of Electrical Engineering, Chinese Academy of Sciences, Beijing, China

Yaohua Li
Key Laboratory of Power Electronics and Electric Drive, Institute of Electrical Engineering, Chinese Academy of Sciences, Beijing, China

Preface

Power electronics is defined as the application of solid-state electronics to the control and conversion of electric power. It also refers to a subject of research in electronic and electrical engineering that deals with the design, control, computation, time-varying energy-processing electronic systems with fast dynamics. Power electronic converters can be found wherever there is a need to modify the electrical energy form. With "classical" electronics, electrical currents and voltage are used to carry information, whereas with power electronics, they carry power. Some examples of uses for power electronic systems are DC/DC converters used in many mobile devices, such as cell phones or PDAs, and AC/DC converters in computers and televisions. Large scale power electronics are used to control hundreds of megawatt of power flow across our nation. Research in this area includes power electronics applications to control large scale power transmission and distribution as well as the integration of distributed and renewable energy sources into the grid. It is estimated that by the year 2030, more than 80% of all electrical energy will be processed by power electronics. The advantages continue to grow for technical engineers who understand the fundamental principles and technical requirements of modern power conversion systems.

Fundamentals of Power Electronics covers design-oriented analysis, modeling and simulation techniques leading to practical engineering of high-performance power electronics systems. This book will lead you to practical examples of the most relevant concepts and methods. Power electronics applications are extended to various fields such as Aerospace, Automotive electrical and electronic systems, commercial, industrial, residential, telecommunication, transportation, utility systems, etc. In case of automotive electronics, the electrically-generated systems are used in automobiles such as road vehicles like telematics, in-car entertainment systems, carputers, and so on. The need to control engines of automobiles originated in automotive electronics for proper controlling and conversion. Application of power electronics in automotive applications plays a major role in controlling automotive electronics. Automotive electronics include modern electric power steering, HEV main inverter, central body control, braking system, seat control, and so on. Application of power electronics in the automotive power generation system provides automotive alternators with improved efficiency and high power, along with high temperature withstanding capacity and high-power density with a variety of research in designing of alternator with a switched mode power electronics applications. The frequently used alternator in automotive applications is Lundell or Claw-pole alternator, as it is suitable for the required emerging performance. Field and armature characteristics of this alternator are enhanced by the use of power electronics. These alternators are used in automobiles for supplying power to the batteries and electrical system while the engine is running. Automotive alternators require a power electronic voltage regulator for producing a constant voltage at the battery terminals by modulating small field current.

Editor
Nelson Bolívar, Ph.D

INTRODUCTION

Power Electronics refers to an interdisciplinary subject within electrical engineering that deals with the design, control and conversion of power in its electric form. A system that converts electric energy to an electric load through a control circuit is known as a Power Electronic System.

Power electronics is the applications of solid-state electronics for the control and conversion of electric power.

Power electronic converters: to modify the form of electrical energy (voltage, current or frequency).

Power range: from some mill watts (mobile phone) to hundreds of megawatts (HVDC transmission system). With "classical" electronics, electrical currents and voltage are used to carry information, whereas with power electronics, they carry power. Thus, the main metric of power electronics becomes the efficiency.

The first very high power electronic devices were mercury arc valves. In modern systems the conversion is performed with semiconductor switching devices such as diodes, thyristors and transistors. In contrast to electronic systems concerned with transmission and processing of signals and data, in power electronics substantial amounts of electrical energy are processed.

An AC/DC converter (rectifier) is the most typical power electronics device found in many consumer electronic devices, e.g., television sets, personal computers, battery chargers, etc. The power range is typically from tens of watts to several hundred watts. In industry the most common application is the variable speed drive (VSD) that is used to control an induction motor. The power range of VSDs starts from a few hundred watts and end at tens of megawatts.

The power conversion systems can be classified according to the type of the input and output power:

- AC to DC (rectification)
- DC to AC (inversion)
- DC to DC (chopping)
- AC to AC (transformation)

Role of Power Electronic Converters

Power electronics is an enabling technology that achieves conversion of electric power from one form to another, using a combination of high-power semiconductor devices and passive components— chiefly transformers, inductors, and capacitors. The input and output may be alternating current (ac) or direct current (dc) and may differ in magnitude and frequency. The conversion sometimes involves multiple stages with two or more converters connected in a cascade. The end goals of a power electronic converter are to achieve high efficiency of conversion, minimize size and weight, and achieve desired regulation of the output. Figure 1 shows power electronic converters in a generic application.

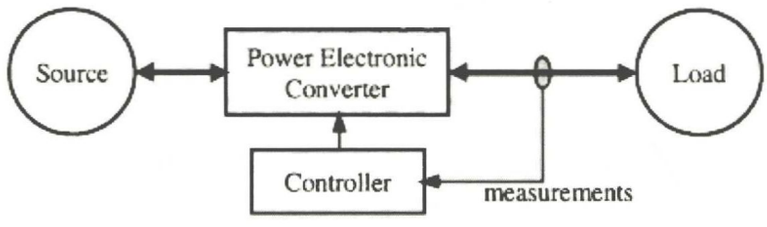

Figure 1: Application of power electronic converters.

Principle

The instantaneous dissipated power of a device P = V.I

Thus, losses of a power device are at a minimum when the voltage across it is zero (the device is in the On-State) or when no current flows through it (Off-State). Therefore, a power electronic converter is built around one (or more) device operating in switching mode (either On or Off).

Applications

Power electronic converters can be classified into four different types on the basis of input and output, dc-dc, dc-ac, ac-dc, and ac-ac, named with the first part referring to the input and the second to the output. The diode bridge rectifier is the front end for most low-power converters. It converts line frequency ac (e.g., from a wall outlet) to an unregulated dc voltage, and the process is commonly called rectification. In a dc-dc converter, both the input and the output are dc, and in the simplest case the output voltage needs to be regulated in presence of variation in load current and changes in the input voltage. A computer power supply has a diode bridge front end followed by a dc-dc converter, the combination of which converts line frequency ac voltage to several regulated dc voltages (Figure 2).

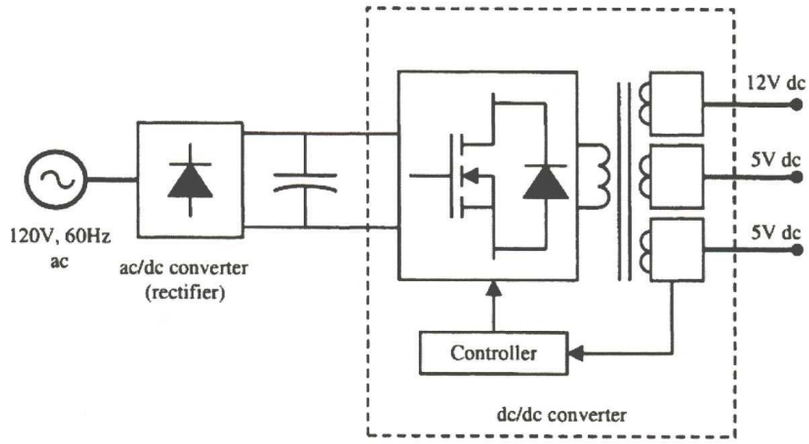

Figure 2: Computer power supply.

Electronic ballasts for compact fluorescent lamps consist of a line frequency rectifier followed by a dc to high-frequency ac converter (frequency range of 20 to 100 kHz) whose output is connected to a resonant tank circuit that includes the load. In an adjustable speed motor drive application (Figure 3), the input is a 3-phase ac supply, and the output is a 3-phase ac whose magnitude and frequency are varied for optimum steady-state operation and dynamic requirements of the drive.

Development of power semiconductors with very high voltage and current ratings has enabled the use of power electronic converters for utility applications. In transmission systems, power electronic converters are being utilized to control power flow, damp power oscillations, and enhance system stability. At the distribution level, power electronic converters are used for enhancing power quality by means of dynamic voltage restorers, static var compensators, and active filters. Power electronic converters also play a significant role in grid connection of distributed generation and especially renewable energy sources; their functions include compensation for steady state and dynamic source characteristics leading to optimal energy transfer from the source, and protective action during contingencies. Future automotives are expected to have a large number of power electronic converters performing various functions, for example, electric power steering, active suspension, control over various loads, and transferring power between the conventional 14-V bus and the recently proposed 42-V Power Net [1]. Hybrid electric and all-electric vehicles also utilize controlled power electronic converters for interfacing the battery and motor/generator. The proliferation of power electronics connected to the utility grid has also led to power quality concerns due to injection of harmonic currents by grid-connected inverters, and highly distorted currents drawn by diode bridge rectifiers. Due to fast transients of voltages and currents within power converters, they can be a source of electromagnetic emissions leading to electromagnetic interference. Several solutions to limit and correct these effects have therefore been developed.

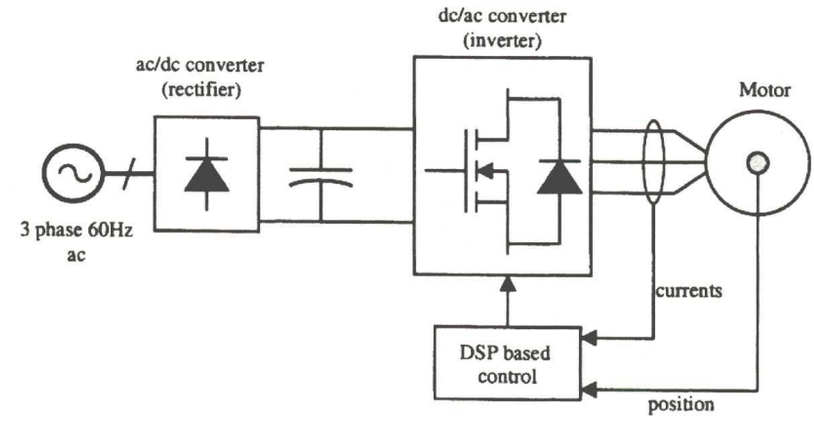

Figure 3: Adjustable speed motor drive.

试读结束：需要全本请在线购买： www.ertongbook.com